ARMATUREN
free of cavities & maintenance

engineered.
fast.
dynamic.

Type ISO-FS-HF / ISO-FSN-HF

Plug valves for HF alkylation (UOP)

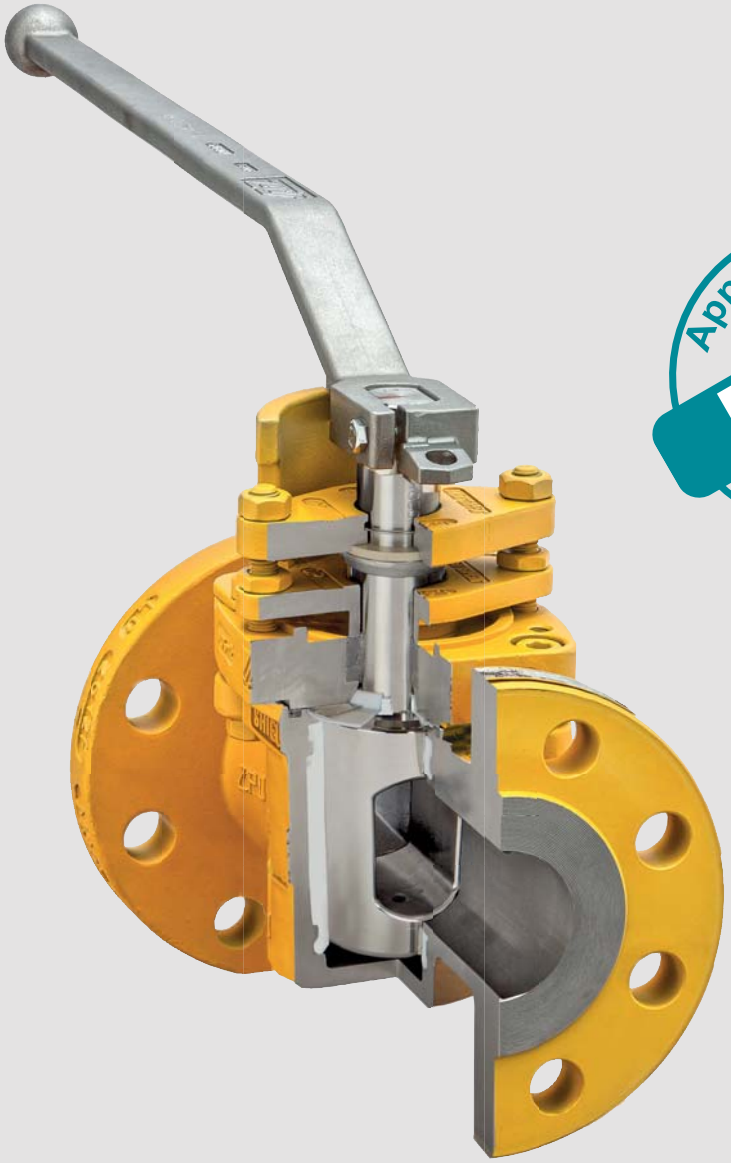

Approved! UOP Approved!

Product leaflet

Type ISO-FS-HF & ISO-FSN-HF

HF Alkylation plug valves

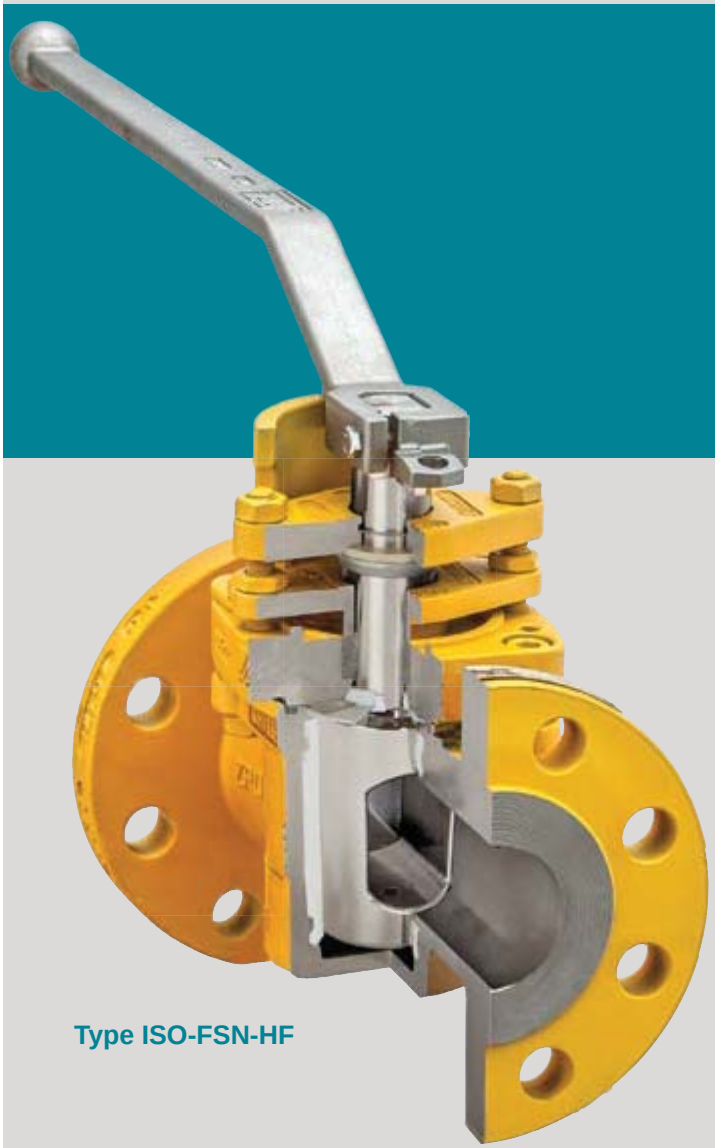

Type ISO-FSN-HF

- **certified by licensor UOP-Honeywell for HF (hydrofluoric acid) alkylation process**
- **listed in UOP piping specifications: HF-1, HF-10, HF-2, HF-20**
- **completely safe for operator and environment**
- **100% tightness to atmosphere**

Design characteristics

- triple stem packing
- Fire-Safe - API 607 / ISO 10497
- full Monel body, plug, cover
- special acid detection paint for visual leakage indication

Testing and Materials

- 100% radiographic inspection of valve bodies
- 100% Helium shell testing with 32 bar (460 psig)
- 100% hydrostatic testing of 1,5x nominal pressure with paraffin oil
- 100% seat closure testing with air (6 bar / 87 psig)

Options

- vented plug
- other pressure rating
- different plug valve types

PT diagram, plug types, sealing systems, material selection: see catalogue part ENGINEERING

Type overview

engineered.
fast.
dynamic.



Type ISO-FSN-HF / ISO-FS-HF

- for HF alkylation
- certified by UOP
- sealing system optional FSN / FS

NPS ½ - 24 / Class 300

Range of application
-29°C (-20°F) bis 220°C (428°F)



Type ISO-EXTRA-FS-HF

- full round bore plug
- 2- up to 5-way

DN 15 - 600 / PN 10 - 100
NPS ½ - 24 / Class 150 - 600

Range of application:
-60 < T < 230/320°C,
vacuum-capable



Type ISO-MB-FS-HF

- Block / forged design with threaded ends
- resistance to pitting and crevice corrosion
- 2- up to 5-way

NPS ½ - 3 / Class 150 - 600

Range of application:
-60 < T < 230/320°C,
vacuum-capable

Reliable and tight for years

- complete chambering of PTFE sleeve
- twisting or cold-flow of sleeve eliminated
- self-cleaning / maintenance-free
- SIL 3 suitable

Free of cavities

- no contamination or media scaling

Perfect tightness in-line and to atmosphere

- plug adjustment
- very low emission values acc. to TA-Luft and EPA 21
- High performance safety sealing with triple stem packing

In addition to HF alkylation plants, AZ plug valves are the best choice in many other refinery processes, e.g.:

- Sulphur alkylation (H_2SO_4 alkylation)
- Desulphurisation, Sulphur recovery
- Crude Oil
- Tank Farms
- Jet Fuel
- Flare Gas
- LPG

Type ISO-FS-HF

Plug valve with Fire-Safe cover sealing

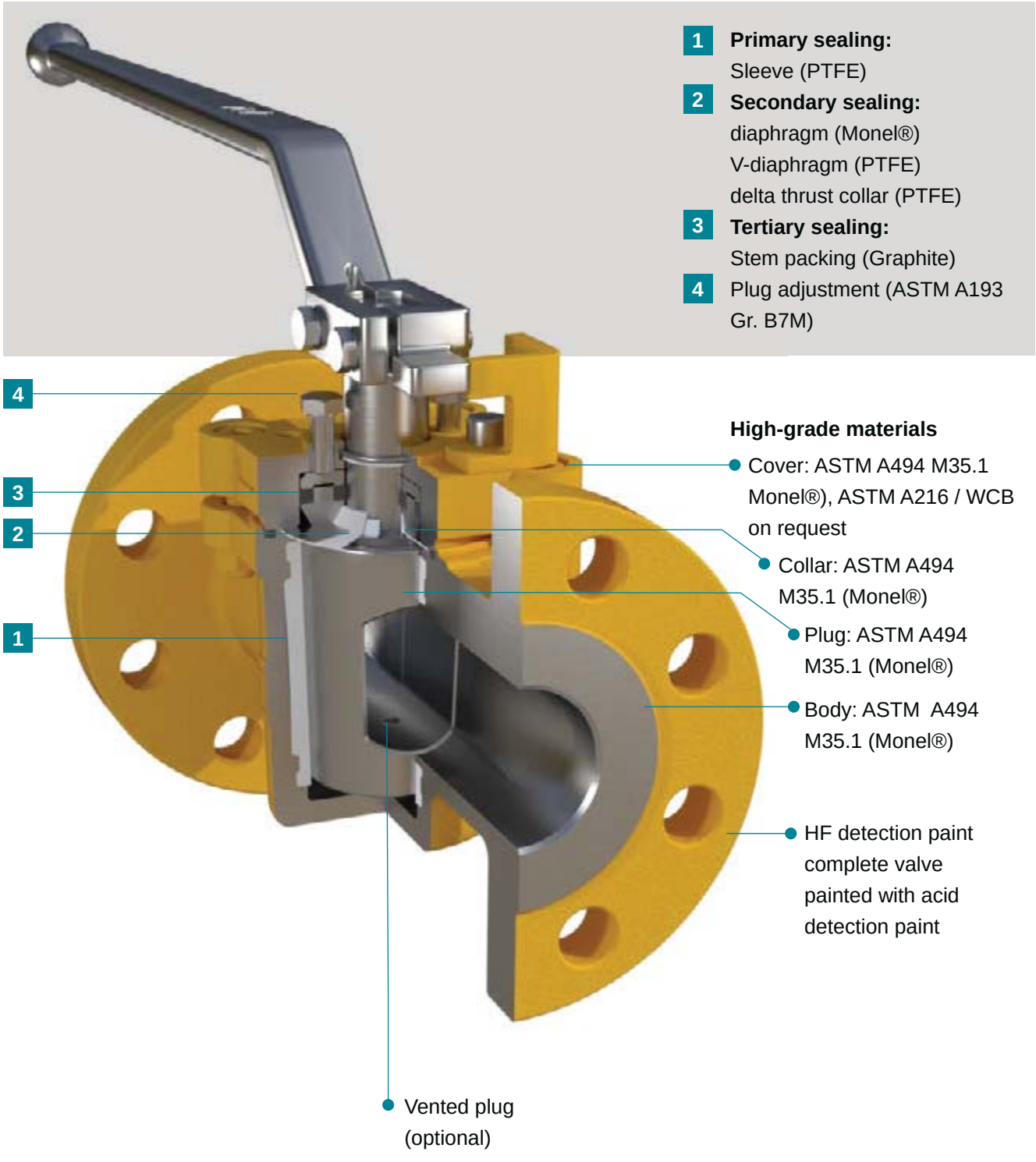

Listed in UOP piping specifications:
HF-1, HF-10, HF-2, HF-20

Type ISO-FSN-HF

Plug valve with triple safety stem packing, Fire-Safe

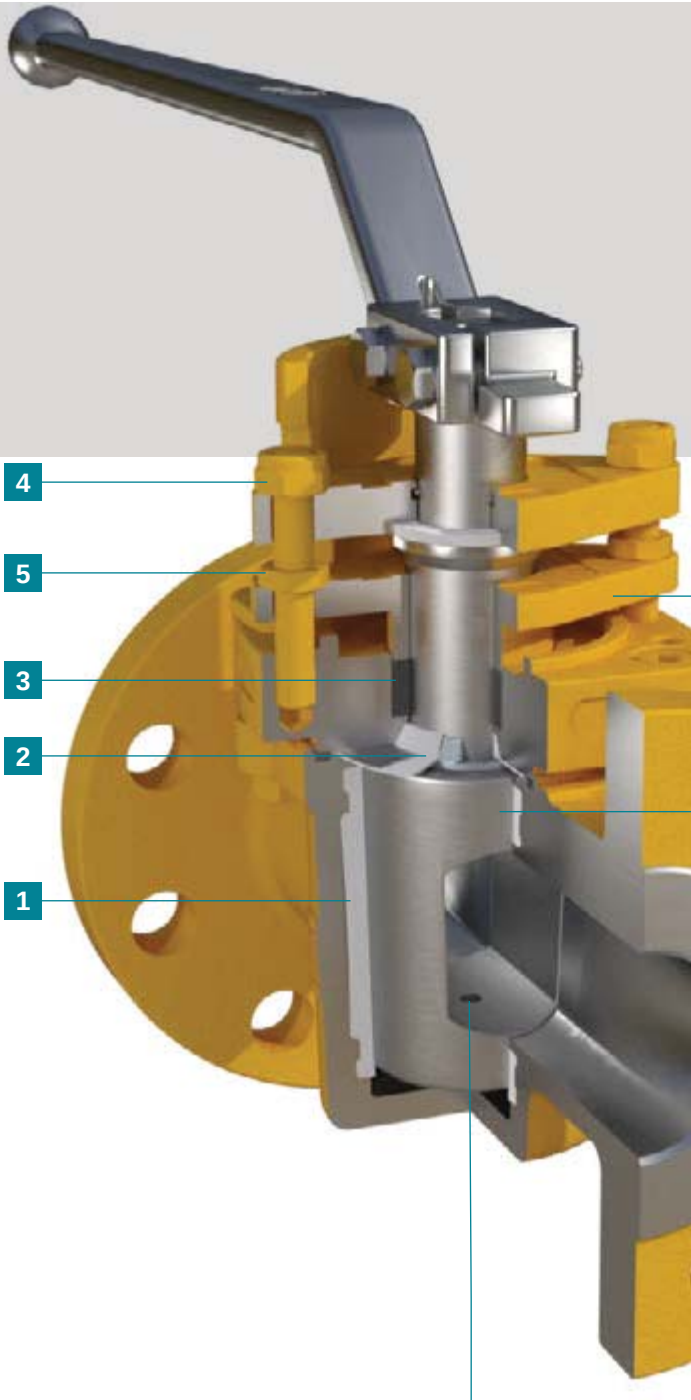

1 **Primary sealing:**
Sleeve (PTFE)

2 Secondary sealing:
diaphragm (Monel®)
V-diaphragm (PTFE)
delta thrust collar (PTFE)

3 **Tertiary sealing:**
Triple stem packing (Graphite)

4 Plug adjustment (ASTM A194 Gr. B2M)

5 Stuffing box adjustment
(ASTM A194 Gr. 2HM)

High-grade materials

- Adjusting gland: ASTM A494 M35.1 (Monel®)
- Cover: ASTM A494 M35.1 (Monel®)
- Plug: ASTM A494 M35.1 (Monel®)
- Body: ASTM A494 M35.1 (Monel®)
- HF detection paint complete valve painted with acid detection paint
- Vented plug (optional)

Listed in UOP piping specifications:
HF-1, HF-10, HF-2, HF-20

Type ISO-HF
Technical information

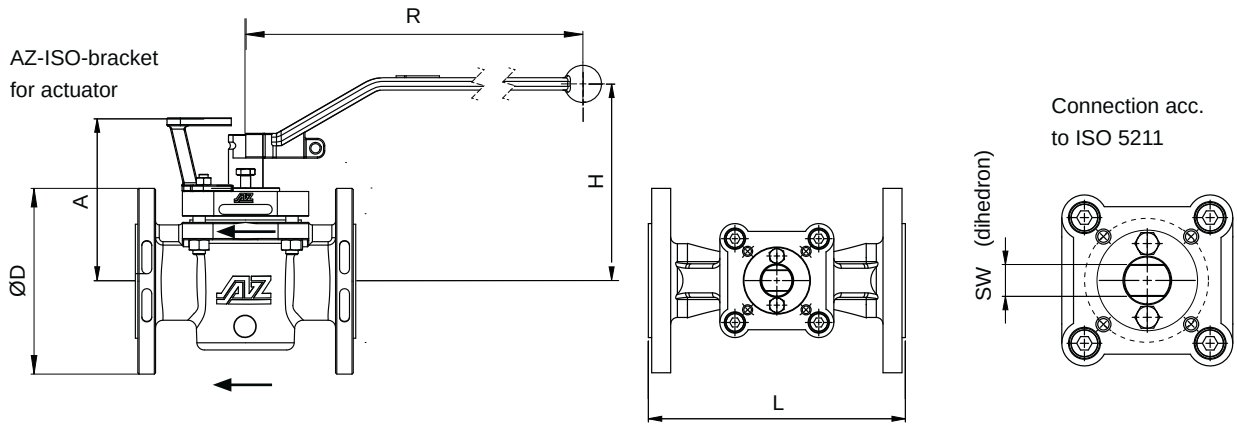

	NPS	Class	UOP no.	L [mm]	øD [mm]	bracket / lever A	H	R	ISO flange	SW [mm]	torque* [Nm]	weight [kg]	K_{VS} [m³/h]	C_V [US.gal/min]
ASME B16.34	½	300	016580-1	140	95	101	103	200	F07	11	30	3,1	13	15
	¾	300	016580-1	152	115	101	103	200	F07	11	30	4,0	13	15
	1	300	016580-1	165	125	107	109	200	F07	11	30	4,9	26	31
	1½	300	016580-1	190	155	119	125	320	F07	14	80	9,6	79	92
	2	300	016580-1	216	165	153	159	420	F10	19	120	13,3	156	180
	3	300	016580-1	283	210	168	165	600	F10	22	200	24,5	228	264
	4	300	016580-1	305	255	168	165	600	F10	22	200	33,5	198	229

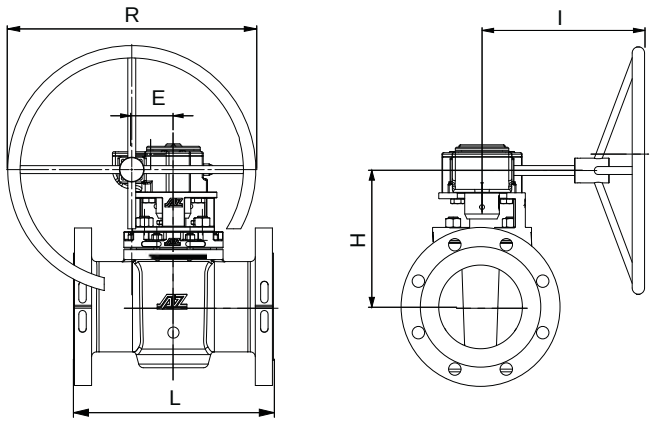

	NPS	Class	UOP no.	L [mm]	øD [mm]	gearbox (Pro-Gear) [mm] E	R	H	I	Type	DIN flange	ISO [mm]	torque* [Nm]	weight [kg]	K_{VS} [m³/h]	C_V [US.gal/min]
ASME B16.34	4S	300	016580-5	305	255	69	300	180	280	Q1500-S	F16	27	300	46	542	627
	6	300	016580-3	403	320	84	500	275	328	Q1500-S	F16	27	900	97	775	896
	8	300	016580-3	419	380	118	500	321	363	Q3000-S	F16	36	1200	113	1978	2286
	10	300	016580-3	457	445	118	500	356	328	Q5000-S	F16	36	1500	181	2382	2754
	12	300	016580-3	502	520	118	500	356	328	Q5000-S	F16	36	2600	216	1925	2225
	14	300	016580-13	762	585	138	500	460	465	Q6500-S	F25	46	5500	210	2394	2768
	16	300	016580-13	600	650	138	700	475	465	Q6500-S	F25	46	5500	410	4618	5339
	18	300	016580-13	914	710	180	700	515	545	Q12000-S	F30	55	6400	780	9135	10561
	20	300		991	775	180	700	515	520	Q12000-S	F30	55	7500	825	9863	11405
	24	300		1143	915	180	700	515	520	Q12000-S	F30	55	7500	1070	9509	10993

*) manufacturer recommended sizing torque (incl. 100% safety)

In accordance with the standard, we reserve the right to provide threaded holes in flanges in case of space constraints.

Temperature range: T_{min} -29°C / T_{max} 220°C

Type ISO-FSN-HF
Technical information

Mounting flange for actuator mounting

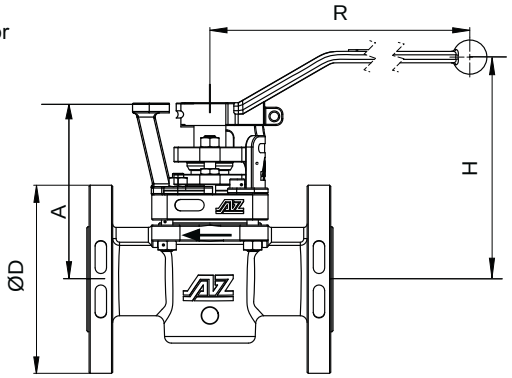

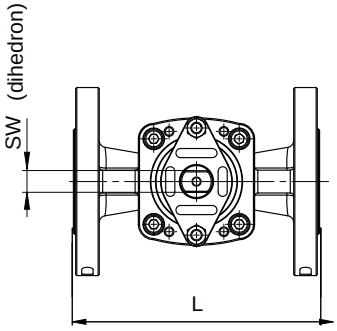

	NPS	Class	UOP no.	L [mm]	øD [mm]	bracket / lever [mm] A	H	R	top flange	SW [mm]	torque* [Nm]	weight [kg]	K_{VS} [m^3/h]	C_V [US.gal/min]
ASME B16.34	½	300	016580	140	95	114	135	200	F07	11	45	4,0	13	15
	¾	300	016580	152	115	114	135	200	F07	11	45	4,3	13	15
	1	300	016580	165	125	120	135	200	F07	11	45	4,9	26	31
	1½	300	016580	190	155	149	168	320	F07/F10	14	120	10,5	79	92
	2	300	016580	216	165	178	196	420	F10/F12	19	180	15,3	156	180
	3	300	016580	283	210	238	204	600	F10/F12	22	300	25,5	228	264
	4	300	016580	305	255	238	204	600	F10/F12	22	300	34,5	198	229

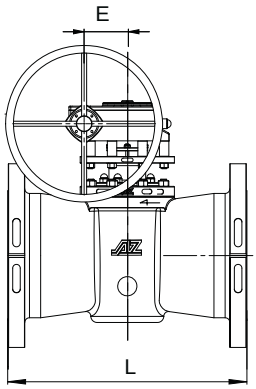

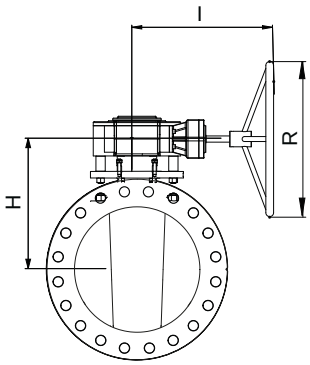

	NPS	Class	UOP no.	L [mm]	øD [mm]	gearbox (Pro-Gear) [mm] E	R	H	I	Type	top flange	SW [mm]	torque* [Nm]	weight [kg]	K_{VS} [m^3/h]	C_V [US.gal/min]
ASME B16.34	4S	300	016580-4	305	255	69	300	227	280	Q1500-S	F12	27	450	48	542	627
	6	300	016580-2	403	320	84	500	347	328	Q1500-S	F12	27	1350	100	775	896
	8	300	016580-2	419	380	118	500	400	363	Q3000-S	F14	36	1800	116,5	1978	2286
	10	300	016580-2	457	445	118	500	327	328	Q5000-S	F16	36	2250	185	2382	2754
	12	300	016580-2	502	520	118	500	327	328	Q5000-S	F16	36	3900	220	1925	2225
	14	300	016580-14	762	585	138	500	510	465	Q6500-S	F16	46	8250	220	2394	2768
	16	300	016580-14	600	650	138	700	525	465	Q6500-S	F16	46	8250	425	4618	5339
	18	300	016580-14	914	710	180	700	565	545	Q12000-S	F25	55	9600	795	9135	10561
	20	300		991	775	180	700	515	520	Q12000-S	F25	55	11250	825	9863	11405
	24	300		1143	915	180	700	515	520	Q12000-S	F25	55	11250	1070	9509	10993

*) manufacturer recommended sizing torque (incl. 100% safety)

In accordance with the standard, we reserve the right to provide threaded holes in flanges in case of space constraints.

Temperature range: T_{min} -29°C / T_{max} 220°C

AZ-plug valve: the design principle

Key advantages

- free of cavities
- no contamination of process media
- adjustability of the plug and sealings
- maintenance-free due to self-lubricating and chemical-resistant PTFE-sleeve
- low emission design
- constant torque (Δp independent !)
- vacuum-capable

Tapered plug

- plug pressed into the PTFE-sleeve
- polished surface

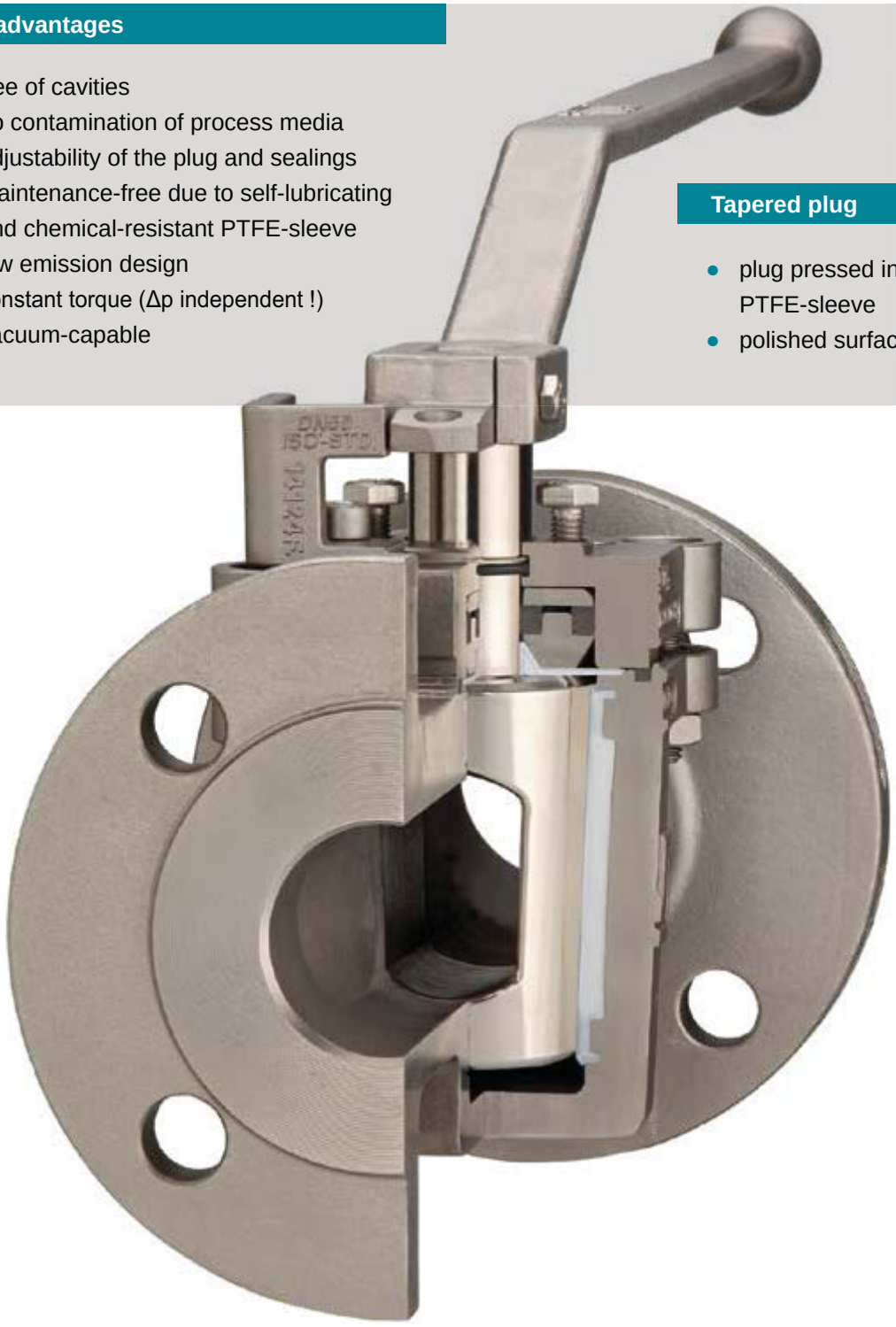

Body

- tapered body interior
- integrated supporting ribs avoid rotation and coldflow of the sleeve
- large sealing surface

PTFE-sleeve

- mechanically locked into the valve body
- complete PTFE chambering
- robust, one-piece sleeve covers and protects the entire plug



Cavity-free: suitable for all media
Technical comparison

AZ-plug valve	Ball valve
Soft seated plug valve with PTFE-sleeve **Main sealing components** • metallic plug • sleeve 	**Soft seated ball valve with PTFE sealing rings, floating ball** **Main sealing components** • metallic ball • sealing rings 
OPEN position	
• suitable for all media due to cavity-free design • sealing surfaces are completely protected free of cavities 	• critical for the following media due to design with cavities ○ corrosives: crevice corrosion ○ polymerizing: clogging ○ crystallizing: abrasion / clogging  cavities cavities 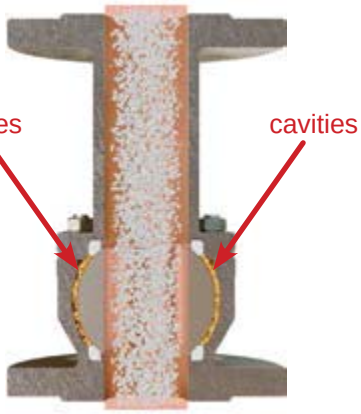
During operation	
• free of cavities, media cannot settle or be trapped • solids are pushed away • no contamination with old media 	• with cavities, media can settle or be trapped • solids cause abrasion of the sealing rings • contamination of process media 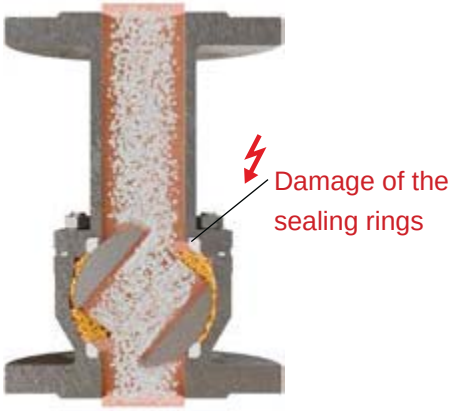 Damage of the sealing rings

Safe and reliable tightness for years

Adjustable



- tapered plug design allows retightening of the sealing on site - if needed
- adjusting bolt even accesible with mounted actuator / gearbox

Several sealings to atmosphere

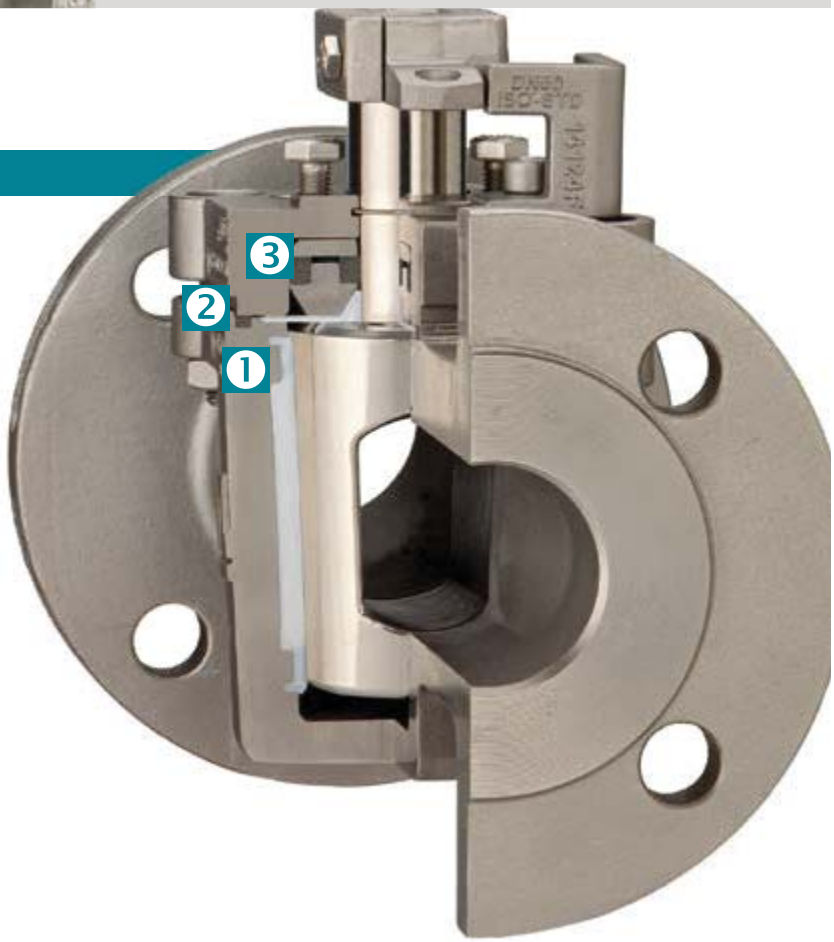

① Primary: sleeve
② Secondary: V-diaphragm / cover seal
③ Tertiary: stem packing (optional)

Detailed information about all certified AZ cover & stem sealing systems see chapter SEALING SYSTEMS

ISO cover

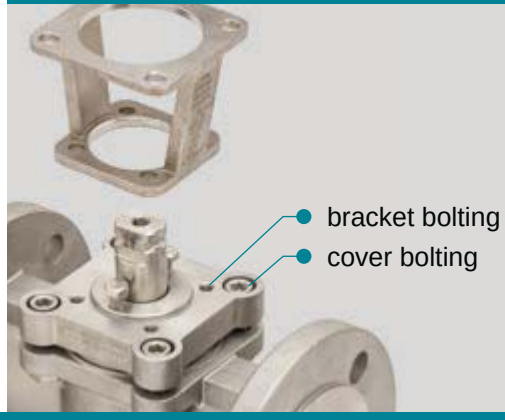

- pressure containing cover bolts separated from bracket boltings
- cover and bracket acc. to ISO 5211 for efficient actuator / gearbox assembly

Reduced and full bore design

Execution

Reduced bore
Type STANDARD

- compact valve (FF / weight)
- optimal torques for economic automation

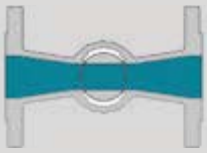



Full round bore
Type EXTRA

- maximum flow rate
- minimal pressure drop
- piggable (optional)

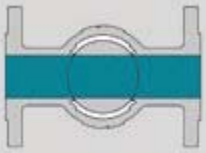



Type ISO-EXTRA

- excellent for abrasive, slurry and solid-containing applications
- maximum flow rate compared to other valve types with the same nominal size



Maximum flow rate

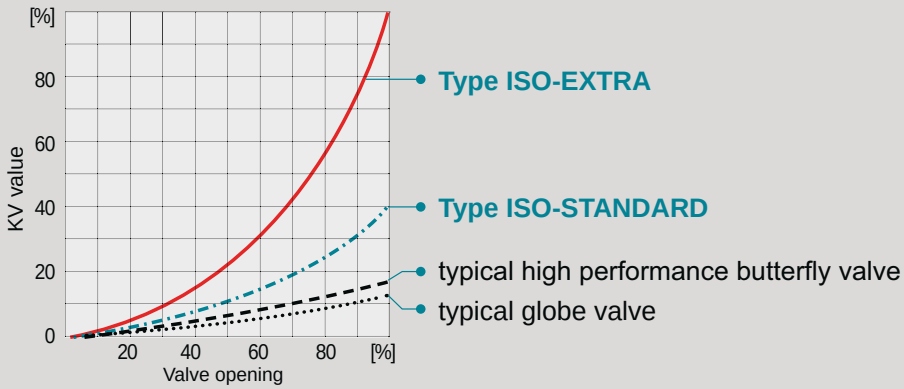

Options



Multi-port

- whole range of multi-port plugs for all configurations (up to 7-way)
- horizontal and vertical installation



Vented options

- plug bottom
- plug upstream / downstream

automatic pressure balance in case of thermal media expansion



System requirements

- **FDA** = Food and Drug Administration certifications and compliant materials
- **GMP** = Good-Manufacturing-Practice
- **CIP** = Clean-in-Place
- Polished internal surfaces, surface finish <0.8 Ra µm (<32 Ra µin)
- oil and grease free
- water-free



All connections possible

- flanges acc. to DIN, ASME, JIS etc.
- welded ends
- screwed and threaded ends
- combinations of connections
- oversize flanges
- compression fittings and ferrule ring couplings
- special connections



High and low temperature

- extended bonnet with sealing at the top
- stem extension for insulated valves

Modular operation concept

Bracket according to ISO 5211

- standard installation of gearbox and actuator
- safe due to independent mounting of cover and bracket
- covering bonnet bolts to prevent opening of valve in service
- precise centering of the bracket to the plug stem due to adjusting ring
- easy inline plug adjustment during the process, screws are always accessible

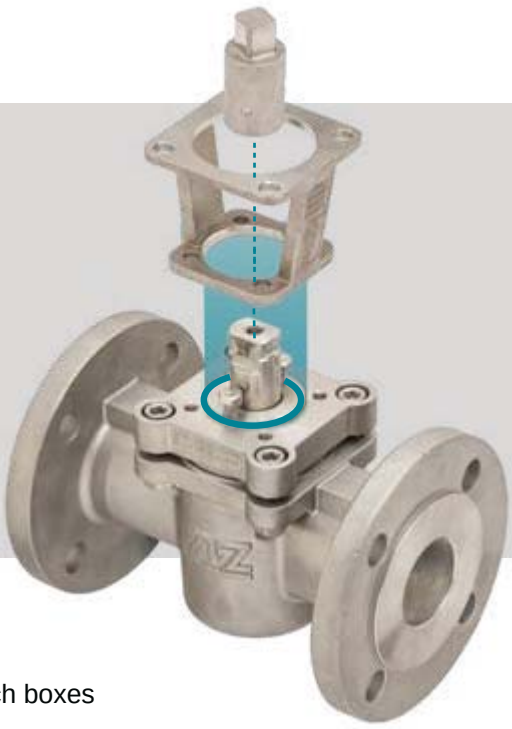

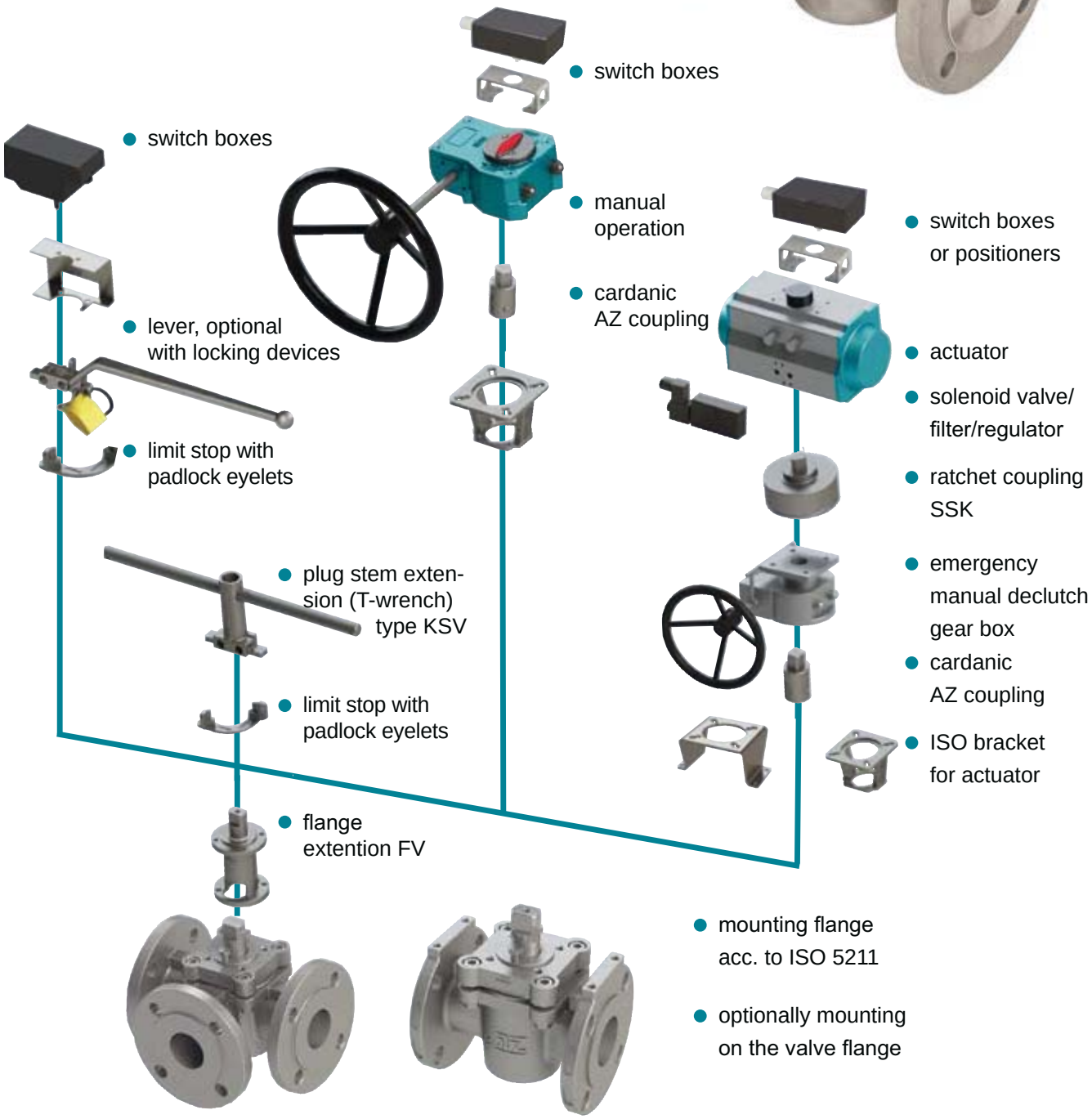

Cover and stem sealing systems suitable for general applications

Type STANDARD



- plug adjustment
- thrust collar
- cover sealing (PTFE)
- stainless steel diaphragm
- **Secondary sealing**: V-diaphragm (PTFE), delta thrust collar (PTFE)
- **Primary sealing**: sleeve*

Type FS2 — Fire-Safe-sealing (API 607)

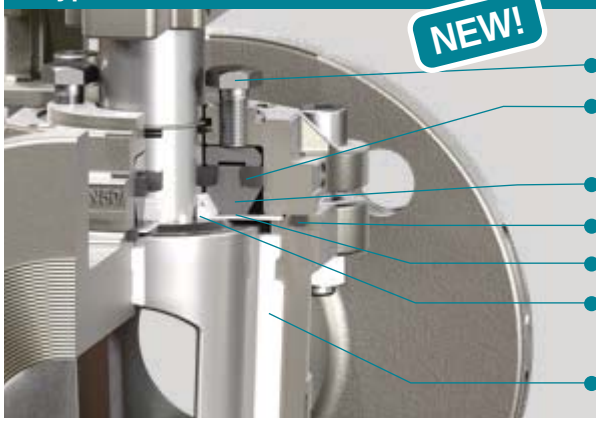

- plug & packing adjustment
- **Tertiary sealing**: Packing to atmosphere (graphite)
- thrust collar
- cover sealing (graphite)
- stainless steel diaphragm
- **Secondary sealing**: V-diaphragm (PTFE) and delta thrust collar (PTFE)
- **Primary sealing**: sleeve*

Type CA2 — Chemistry sealing



- plug & packing adjustment
- **Tertiary sealing**: Packing to atmosphere (PTFE)
- thrust collar
- cover sealing (PTFE)
- stainless steel diaphragm
- **Secondary sealing**: V-diaphragm, delta thrust collar (PTFE)
- **Primary sealing**: sleeve*

*) The sleeve material has a decisive influence on the maximum operating temperature
Material selection acc. to PT-diagram

More safety
for severe applications

engineered.
fast.
dynamic.

Type FSN — Fire-Safe-sealing (API 607)

plug adjustment
triple safety stem packing adjustment
Tertiary sealing: triple safety stem packing (graphite)

Secondary sealing:
V-diaphragm (PTFE) and delta thrust collar (PTFE)

cover sealing (graphite)
Primary sealing: sleeve*

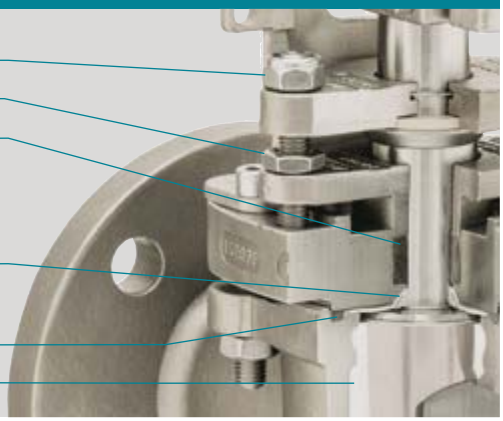

Type FSN-EF — Fire-Safe-sealing (API 607)

NEW!

Emission Free

plug adjustment
triple safety stem packing adjustment
Quaternary sealing: three o-rings at the stem
Tertiary sealing:
triple safety stem packing
Secondary sealing:
V-diaphragm (PTFE) and delta thrust collar (PTFE)
cover sealing (graphite)
Primary sealing: sleeve*



Type FSN-SL — Fire-Safe-sealing (API 607)

live-loaded

plug adjustment
o-rings protect the springs against corrosion
triple safety stem packing adjustment
disk springs (optionally made of Inconel)
Tertiary sealing: triple safety stem packing (graphite)
Secondary sealing:
V-diaphragm (PTFE) and delta thrust collar (PTFE)
cover sealing (graphite)
Primary sealing: sleeve*

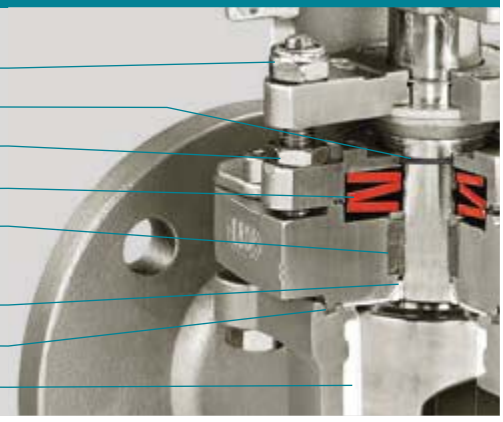

*) The sleeve material has a decisive influence on the maximum operating temperature
Material selection acc. to PT-diagram

Material for **type CASN** and **CASN-SL** chemistry safety sealing: packing and cover sealing in PTFE

Special sealing systems

Chevron packing

- increases the contact pressure (when pressure builds up on the safety stem packing towards plug stem)
- for toxic and fugitive media
- high wear resistance



Type CL Chlorine / gas applications

- approved for chlorine applications and other toxic gases
- ideal for media with changing state of aggregate (e.g. liquid to gas, vice versa)
- vacuum capable



Detection ports for monitoring purpose of lethal gases (phosgene, etc.)

- detection ports for early recognition of potential leakages
- sniffing at sealing surfaces to atmosphere



WORLD'S FIRST EMISSION FREE
plug valve certified acc. to **ISO 15848-1 /** AH
Type FSN-EF

NEW!



Low-Emission
according ISO 15848, TA-Luft & API 641



For all important information about ISO 15848, TA-Luft & API 641, as well as the current certificates, please refer to the "AZ Fugitive Emission" brochure

Latest information about ISO 15848 / API 641 / TA Luft see AZ Fugitive Emissions leaflet



Casting materials



		Casting Material					
Material Group	**Common Name**	**EN / DIN**	**Short name**	**Material-No.**	**ASTM**	**Grade**	**UNS**
Carbon Steel / Ductile Iron							
Ductile Iron	SG Iron	EN 1563	EN-GJS-400-18-LT	5.3103	A395	-	F32800
Carbon Steel	CS	EN 10213	GP240GH	1.0619	A216	WCB	J03002
Low Temp. Carbon Steel	LTCS	EN 10213	G17Mn5	1.1131	A352	LCB	J03003
Low Temp. Carbon Steel	LTCS	EN 10213	G21Mn5	1.1138	A352	LCC	J02505
Stainless Steel							
Stainless Steel	Duplex 2205	EN 10213	GX2CrNiMoN22-5-3(4A)	1.4470	A995	4A-CD3MN	J92205
Stainless Steel	Duplex 1B	EN 10213	GX3NiCrMoCuN26-6-3-3	1.4517	A995	1B-CD4MCuN	J93372
Austenitic	SS	EN 10213	GX5CrNi19-10	1.4308	A351	CF8	J92600
Austenitic	SS	EN 10213	GX2CrNi19-11	1.4309	A351L	CF3	J92700
Austenitic	SS	EN 10213	GX5CrNiMo19-11-2	1.4408	A351	CF8M	J92900
Austenitic	SS	EN 10213	GX2CrNiMo19-11-2	1.4409	A351	CF3M	J92800
Super Austenitic	Alloy 20	EN 10213	NiC420CuMo	1.4500	A351	CN7M	N08007
Super Austenitic	Alloy 20 mod.	EN 10213	GX2NiCrMoCuN25-20	1.4536	A743	CN7MS	J94650
Super Austenitic	AL6XN	-	-	-	A351	CN3MN	J94651
Superduplex	Superduplex 5A	EN 10213	25Cr-7Ni-Mo-N	1.4469	A995	CE3MN	J93404
Nickel Alloy							
	Monel/Alloy400	DIN 17730	G-NiCu30 Nb	2.4365	A494	M35-1	N24135
	Hastelloy C mod.	-	-	-	A494	CW6M	N30107
	Hastelloy C	-	-	2.4537	A494	CW12MW	N30002
	Hastelloy C-276	-	-	2.4883	-	-	-
	Hastelloy B-3	-	-	-	-	-	-
	Inconel 600	-	-	-	A494	CY40	N06040
	Inconel 625	-	-	-	A494	CW6MC	N26625
	Inconel 825	-	-	-	A494	CU5MCuC	N08826
	Nickel	DIN 17730	G-Ni 95	2.4170	A494	CZ100	N02100
Other Material Groups							
Tantalum	Tantalum	-	-	-	-	-	-
Titanium	Ti 2	DIN 17865	G-Ti 2	3.7031	B367	C-2	R52550
Zirconium	Zirconium 702	-	-	-	B752	702C	-
Zirconium	Zirconium 705	-	-	-		705C	-

All rights reserved, all indications without engagement, subject to modifications.

The use of these equivalents has to be evaluated on a case-by-case basis.

Other materials on request.

Equivalent forged and bar-stock materials





			Similar Forged Material						Bar Material	
Common Name	**Mat.Nr.**	**Grade**	**EN / DIN**	**Short Name**	**Mat.Nr.**	**ASTM**	**Grade**	**UNS**	**ASTM**	**Short**
Carbon Steel / Ductile Iron										
SG Iron	5.3103	-	EN 1563	EN-GJS-400-18-LT	5.3103	A395-99	60-40-18	-	-	-
CS	1.0619	WCB	EN 10213	GP240GH	1.0619	A105	A105	-	-	-
LTCS	1.1131	LCB	-	-	-	A350	LF2-Class1	G10300	-	-
LTCS	1.1138	LCC	-	-	1.0566	A350	LF2-Class1	G10250	-	-
Stainless Steel										
Duplex 2205	1.4470	4A-CD3MN	EN 10028-7	X2CrNiMoN22-5-3	1.4462	A182	F51	S32205	A479	S31803
Duplex 1B	1.4517	1B-CD4MCuN	EN 10028-7	X2CrNiMoCuN25-5-3	1.4507	A182	F59	S32520	A479	S32550
SS	1.4308	CF8	EN 10028-7	X5CrNi18-10	1.4301	A182	F304	S30400	A276	304
SS	1.4309	CF3	EN 10028-7	X2CrNi19-11	1.4306	A182	F304L	S30403	A276	304L
SS	1.4408	CF8M	EN 10028-7	X5C4NiMo17-12-2	1.4401	A182	F316	S31600	A276	316
SS	1.4409	CF3M	EN 10028-7	X2CrNiMo 17-12	1.4404	A182	316L	S31603	A276	316L
Alloy 20	1.4500	CN7M	-	-	2.4660	B462	N08020	N08020	B473	N08020
Alloy 20 mod.	1.4536	CN7MS	-	-	-	-	-	-	-	-
AL6XN	-	CN3MN	EN 10028-7	X1NiCrMoCuN25-20-7	1.4529	A182	F62	N08367	B462	N08367
Superduplex 5A	1.4469	CE3MN	EN 10028-7	X2CrNiMoN25-7-4	1.4410	A182	F63	S32615	-	-
Nickel Alloy										
Monel/Alloy400	2.4365	M35-1	DN 17744	NiCu30Fe	2.4360	B165	Alloy 400	N04400	B164	N04400
Hastelloy C mod.	-	CW6M	-	-	-	A494	-	-	-	-
Hastelloy C		CW12MW	-	NiMo16CrW	-	A494	-	-	-	-
Hastelloy C-276		-	DIN 17744	NiMo16Cr15W	2.4819	B565	N10675	N10276	B574	N10276
Hastelloy B-3	-	-	DIN 17744	NiMo29Cr	2.4600	B565	N10675	N10675	B335	N10675
Inconel 600	-	CY40	DIN 17742	NiCr15Fe	2.4816	B565	N06600	N06600	B166	N06600
Inconel 625	-	CW6MC	DIN 17744	NiCr22Mo9Nb	2.4856	B565	N06625	N06625	B446	N06625
Inconel 825	-	CU5MCuC	DIN 17744	NiCr21Mo	2.4858	B564	N08825	N08825	B425	N08825
Nickel	2.4170	CZ100	-	-	-	-	-	-	B160	N02200
Other Material Groups										
Tantalum	-	-				B365	TaW2,5	R05252	-	-
Ti 2	3.7031	C-2	DIN 17864	Grade 2	3.7035	B381	F2	R50400	B348	Grade 2
Zirconium 702	-	702C	-	-	6.0702	B493	R60702	R60702	B550	R60702
Zirconium 705	-	705C	-	-	-	B493	R60705	R60705	B550	R60705

All rights reserved, all indications without engagement, subject to modifications.

The use of these equivalents has to be evaluated on a case-by-case basis.

Other materials on request.

Sleeve materials / Lining materials



Type	UHMW-PE	PFA	PTFE, virgin	PTFE, glass	PTFE, graphite	TFM	PTFE-P
T_{max}	80°C / 176°F	200°C / 392°F	230°C / 446°F	230°C / 446°F	250°C / 482°F	250°C / 482°F	320°C / 608°F

Category	Sleeve Material	Characteristics	Typical applications	T_{MAX}
PTFE	PTFE, virgin	low friction, very good sealing characteristic	standard sleeve material for most applications	230°C / 446°F
RPTFE	PTFE-Glass	reinforced PTFE	additional stability for multiway valves with horizontal ports	230°C / 446°F
	PTFE-Graphite	reinforced PTFE	high temperature applications	250°C / 482°F
modified PTFE	TFM 1600* NXT 75* M 111*	chemically modified PTFE, reduced permeation, low friction	chemical applications where reduced permeability compared to PTFE is required	250°C / 482°F
Special Sleeves	PTFE-P* NFCE* NCS*	high performance sleeve materials	severe service highest temperatures, high pressure, abrasive applications	320°C / 608°F
PFA	PFA	reduced permeation	chemical applications where reduced permeability compared to PTFE is required	200°C / 392°F
UHMW-PE	UHMW-PE	Ultra High Molecular Weight Polyethylene	radiation resistent, abrasive application	80°C / 176°F

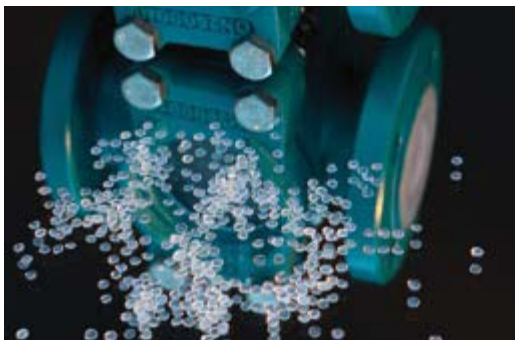

Combination of linings		
body lining	plug lining	T_{max}
PFA	PTFE [1]) or special materials	210°C / 410°F
PFA	PFA	200°C / 392°F
PFA conductive	PFA conductive	125°C / 256°F

1) Plugs with PTFE lining only for two-way valves up to DN 100.
Plugs for multi-way valves not with PTFE lining available.

IMPORTANT NOTE

For demanding conditions, such as process temperatures exceeding 200°C / 392°F (sleeved valve) respectively 150°C / 302°F (lined valve), valve size, media phase, plug position & temperature (constant or fluctuating) may have an impact on the lifetime. Consult factory for proper selection of material and sealing system.

Torques: Factors for different material combinations and sealing systems

Torque for actuator sizing

- Torque values for actuator sizing can be found in the tables of each valve model. These values apply for the sealing systems STANDARD, CA2 as well as FS2 and are based on virgin PTFE sleeve material.
- For other sealing systems, sleeve materials and material combinations, different factors apply as per charts below.
- The given torque values are based on long term records and experimental results. Please consult manufacturer for process media with degreasing effect.

	Sealing system			
sleeve materials for plug valves	STANDARD, FS2, CA2	STANDARD, FS2, CA2 oil and grease-free	CASN, FSN, -SL, -EF	CASN, FSN, -SL, -EF oil and grease-free
PTFE, virgin	1,0	1,3	1,3	1,6
TFM / NXT / M111	1,1	1,4	1,4	1,7
PTFE-"P" / NFCE / NCS	1,5	1,8	1,8	2,1
PTFE-Glass	1,7	2,0	2,0	2,3
PTFE-Graphite	1,7	2,0	2,0	2,3
PFA	2,0	2,3	2,3	2,6
UHMW-PE	2,5	2,8	2,8	3,1

material combinations for linded plug valves		Sealing system	
Body	plug	CA2A / SAFE-LINED / -SL	CA2A / SAFE-LINED / -SL oil and grease-free
PFA	PTFE	according product table (M_{BT} / $M_{1,3}$ / $M_{1,5}$)	1,3
PFA	PFA		1,3
PFA-conductive	PFA-conductive	on request	on request
PFA	special material	on request	on request

Sample calculation

Model F-2 ISO-FS2 - DN50

- breakaway torque (table column $M_{1,3}$ with 30 % safety on breakaway torque)
- cover and stem sealing system FS2
- sleeve material PTFE-Glass

Torque table column $M_{1,3}$	137 Nm
Factor as per table above	1,7
Torque for actuator sizing	137 * 1,7 = **233 Nm**

PT Diagram, PN 16 - PN 100
PTFE sleeved plug valves

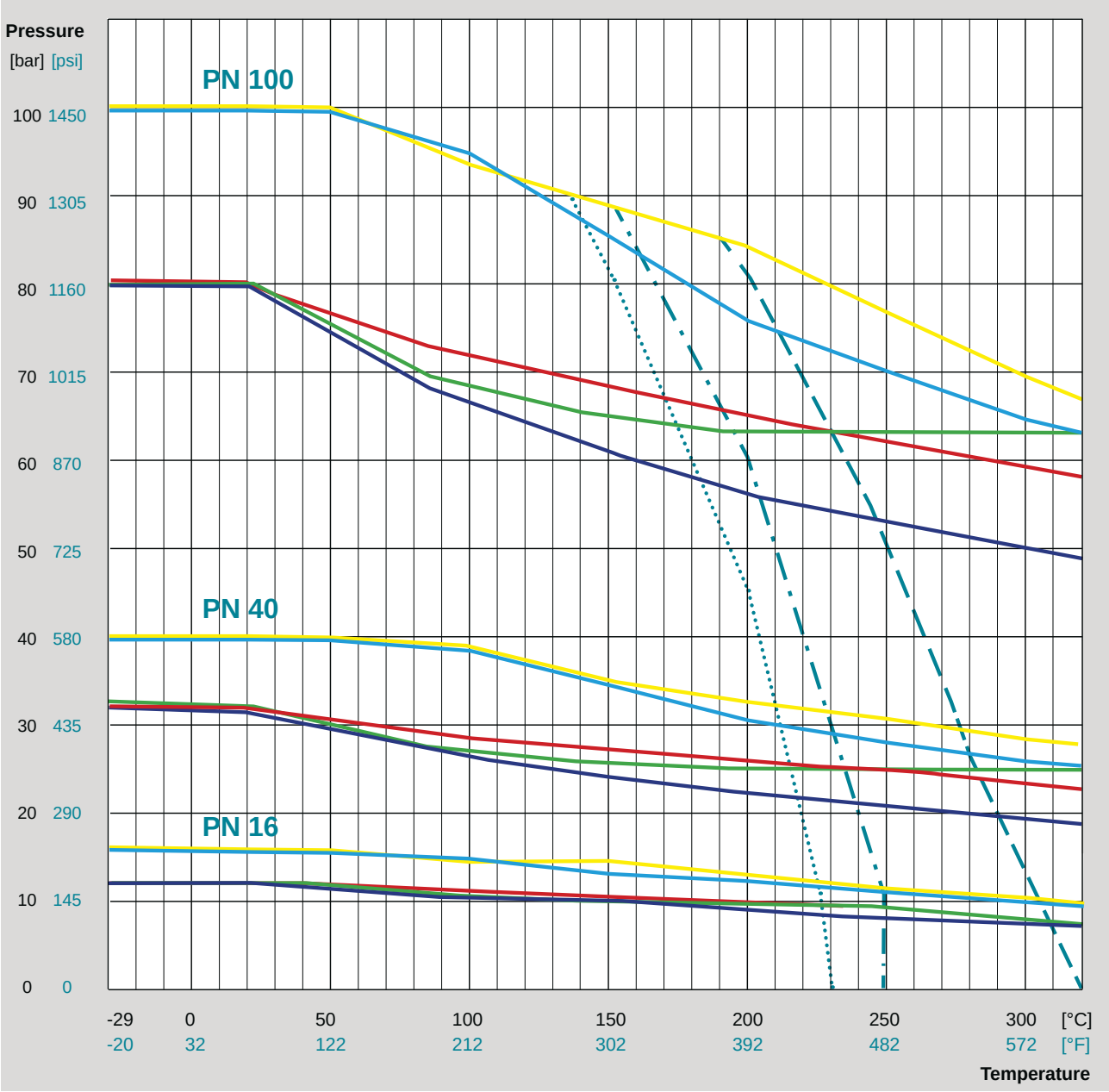

Body material

- EN 10213 - 1.0619 / Carbon Steel
- EN 10213 - 1.4408 / Stainless Steel
- EN 17744 - 2.4819 / Hastelloy
- EN 17730 - 2.4365 / Monel 400
- UNS N08007 - 1.4500 / Alloy 20

other body materials on request

Sleeve material

PTFE (virgin) / PTFE (glass)	T_{max} 230°C / 446°F
TFM / NXT / M111 / PTFE graphite	T_{max} 250°C / 482°F
PTFE-P / NFCE / NCS	T_{max} 320°C / 608°F

other sleeve materials on request

Subject to technical change without notice.

The data given are max. values according to EN 12516-1 and EN 1092-1.

IMPORTANT NOTE

for demanding conditions, such as process temperatures exceeding 200°C / 392°F: Valve size, media phase, plug position & temperature (constant or fluctuating) may have an impact on the lifetime. Consult factory for proper selection of sleeve material, cover sealing type and special features.

For temperatures < -29°C / -20°F, (T_{limit} = -60°C / -76°F) operating temperature, low-temperature carbon steel or austenitic stainless steels are required.

PT Diagram, Class 150 - Class 600
PTFE sleeved plug valves

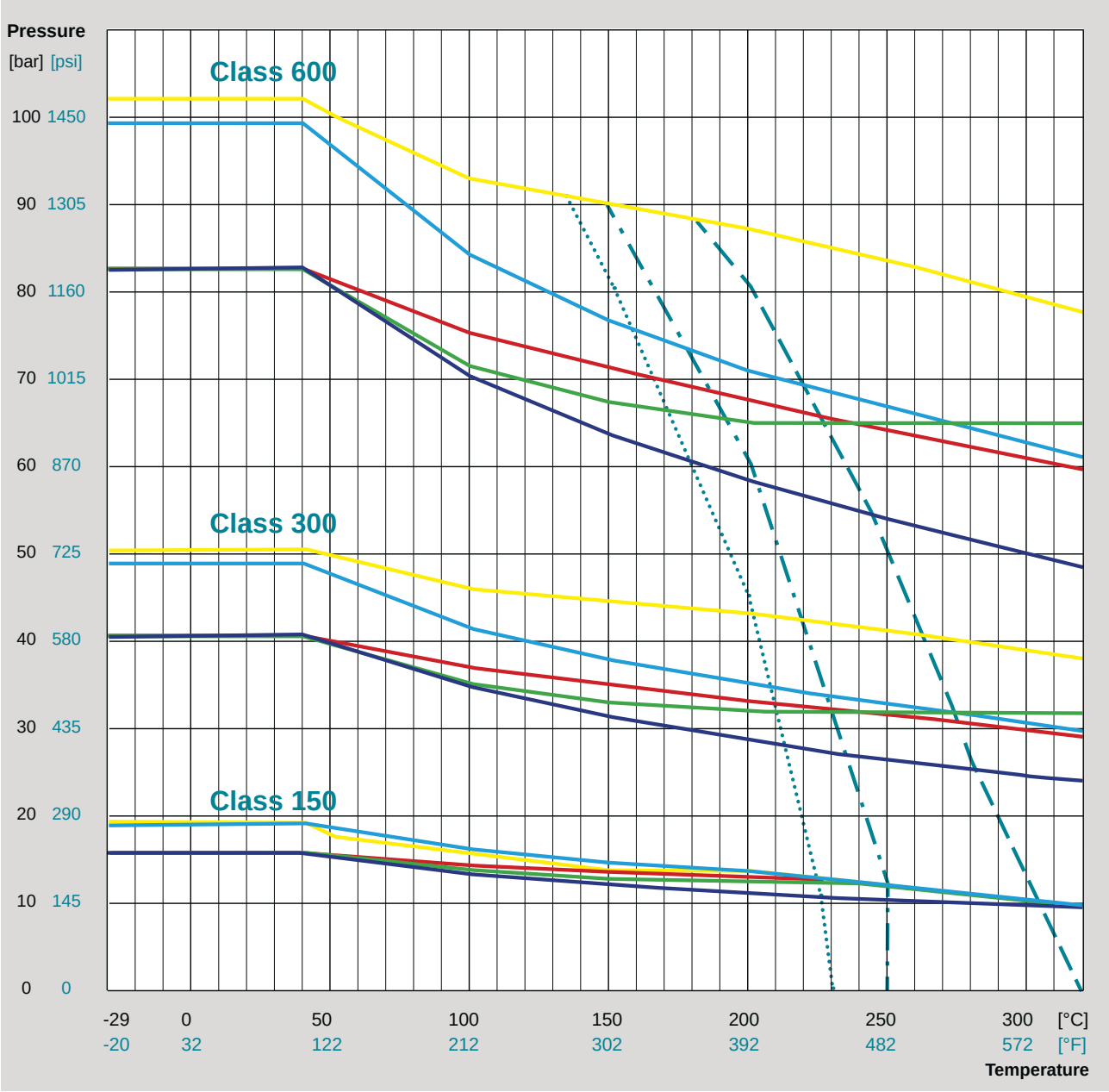

Body material

- ASTM A216 - WCB
- ASTM A351 - CF8M
- ASTM A494 - CW12MW / Hastelloy
- ASTM A494 - M35.1 / Monel 400
- ASTM A351 - CN7M Alloy 20

other body materials on request

Sleeve material

PTFE (virgin) / PTFE (glass)	T_{max} 230°C / 446°F
TFM / NXT / M111 / PTFE graphite	T_{max} 250°C / 482°F
PTFE-P / NFCE / NCS	T_{max} 320°C / 608°F

other sleeve materials on request

Subject to technical change without notice.

The data given are max. values according to ASME B16.34.

IMPORTANT NOTE

for demanding conditions, such as process temperatures exceeding 200°C / 392°F: Valve size, media phase, plug position & temperature (constant or fluctuating) may have an impact on the lifetime. Consult factory for proper selection of sleeve material, cover sealing type and special features.

For temperatures < -29°C / -20°F, (T_{limit} = -60°C / -76°F) operating temperature, low-temperature carbon steel or austenitic stainless steels are required.

PT Diagram High Pressure, PN 160
PTFE sleeved plug valves with trunnion mounted design

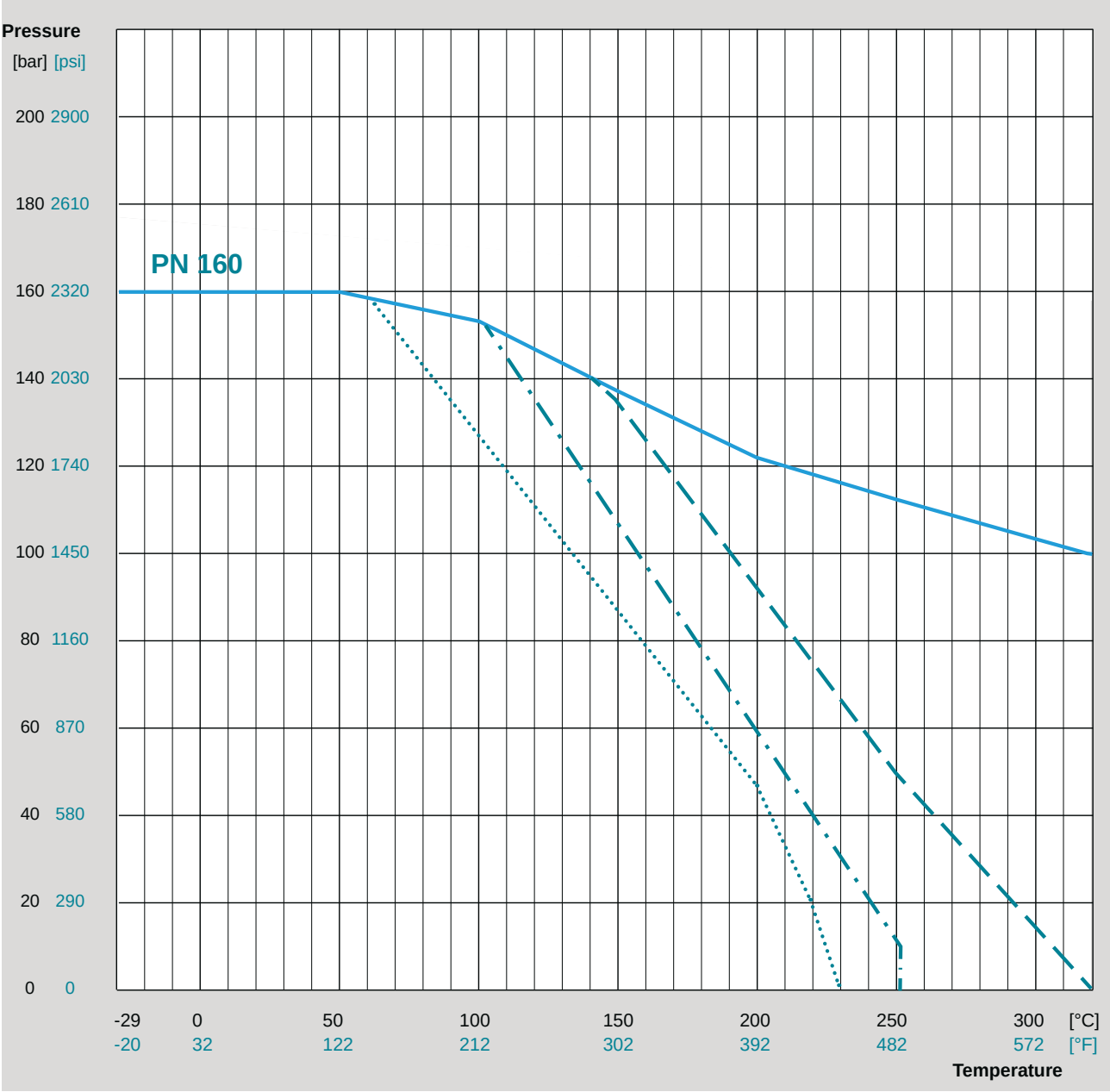

Body material (in line with EN 12516-1 and EN 1092-1)

EN 10213 - 1.4408 / Stainless Steel
other body materials on request

Sleeve material

.....	PTFE (virgin) / PTFE (glass)	T_{max} 230°C / 446°F
-.-.-	TFM / NXT / M111 / PTFE graphite	T_{max} 250°C / 482°F
— —	PTFE-P / NFCE / NCS	T_{max} 320°C / 608°F

other sleeve materials on request

Subject to technical change without notice.

The data given are max. values according to EN 12516-1 and EN 1092-1.

IMPORTANT NOTE

for demanding conditions, such as process temperatures exceeding 200°C / 392°F: Valve size, media phase, plug position & temperature (constant or fluctuating) may have an impact on the lifetime. Consult factory for proper selection of sleeve material, cover sealing type and special features.

For temperatures < -29°C / -20°F, (T_{limit} = -60°C / -76°F) operating temperature, low-temperature carbon steel or austenitic stainless steels are required.

PT Diagram High Pressure, Class 900
PTFE sleeved plug valves with trunnion mounted design

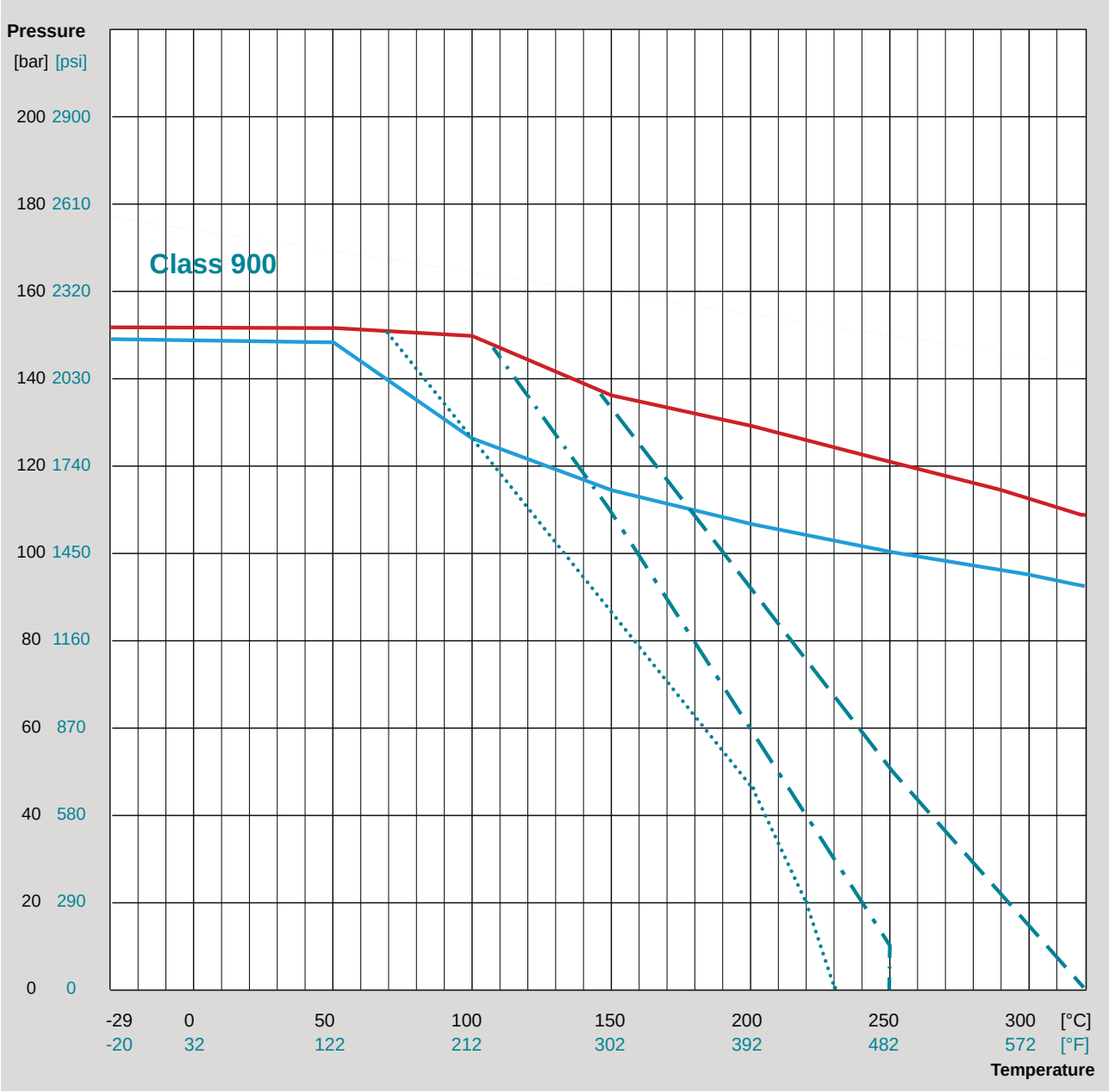

Body material (in line with ASME B16.34)

- ASTM A351 - CF8M / Stainless Steel
- ASTM A995 - CD3MN / Superduplex

other body materials on request

Sleeve material

PTFE (virgin) / PTFE (glass)	T_{max} 230°C / 446°F
TFM / NXT / M111 / PTFE graphite	T_{max} 250°C / 482°F
PTFE-P / NFCE / NCS	T_{max} 320°C / 608°F

other sleeve materials on request

Subject to technical change without notice.

The data given are max. values according to ASME B16.34.

IMPORTANT NOTE

for demanding conditions, such as process temperatures exceeding 200°C / 392°F: Valve size, media phase, plug position & temperature (constant or fluctuating) may have an impact on the lifetime. Consult factory for proper selection of sleeve material, cover sealing type and special features.

For temperatures < -29°C / -20°F, (T_{limit} = -60°C / -76°F) operating temperature, low-temperature carbon steel or austenitic stainless steels are required.

Plug types: two-way and multi-port for standard reduced and full bore design



Design	STANDARD	EXTRA (full bore)	multiway
Plug type	two-way	two-way	e.g. T4



- position indicator for all multi-way valves welded on lever or stem extension
- Lined plug valves: multi-way plugs only with PFA plug lining or made of special materials. Two-way plugs with PTFE lining up to DN 100 / NPS 4 available

Recommendation for three-way valves type F-3-S with vertical outlet (longer life-time compared to type F-3-W with horizontal outlet)

Options

Plugs made of special materials or special designs, e.g. with flushing devices, vent holes in plug bottom or plug upstream / downstream side

2-way	Plug type	Pos. I = 0°	Pos. II = 90°	Pos. III = 180°	Pos. IV = 270°
 Type F-2-ISO-STANDARD	D 	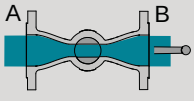	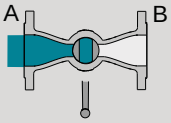		
 Type F-2-ISO-STANDARD-A	T4 * 	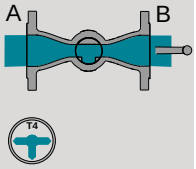	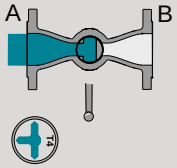		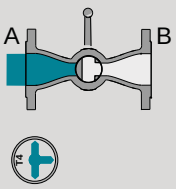

*) For highly expanding media AZ recommends the "i-plug" (relief hole and open plug buttom)

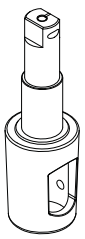

"i-plug"

ARMATUREN
free of cavities & maintenance

Your partner for highest demands!



Complete Catalogue
Edition 2026

AZ plants

Headquarters Germany
AZ Armaturen GmbH
Waldstrasse 7
D-78087 Moenchweiler
Phone: +49 / 7721 / 7504-0
sales@az-armaturen.com
www.az-armaturen.com

Plant Brazil
AZ Armaturen do Brasil LTDA.
Av. Osvaldo Berto, 600
CEP 13255-405 Itatiba - SP
Phone: +55 / 11 / 452499-50 / -51
az@az-armaturen.com.br
www.az-armaturen.com.br

Plant China
AZ Armaturen (Taicang) Co., Ltd.
No. 1 Zhengzhou Road
215400 Taicang City
Phone: +86 / 512 / 53667600
info@az-armaturen.cn
www.az-armaturen.cn

Plant South Africa
AZ Armaturen South Africa PTY LTD.
28 Derick Coetzee Street
Boksburg 1459
Phone: +27 / 11 / 397 3665
sales@az-armaturen.co.za
www.az-armaturen.co.za

Plant USA
AZ VALVES North America L.P.
18702 Intercontinental Crossing Drive
Houston, TX 77073
Phone: +1 / 832 / 827 2163
sales@azvalves.com
www.azvalves.com

Plant Saudi Arabia
AZ Valves Arabia Manufacturing Co.
Building No. 4066
Street 26, Cross 09
Dammam, Kingdom of Saudi Arabia
Phone: +966 / 13 835 1880
info@azvalves.com.sa

AZ services

Europe
- Germany (Moenchweiler & Rhineland)
- France (Lyon/ Bourg-lès-Valence)
- Great Britain (York/Roecliffe)
- Italy (Milan/Caltignaga)
- Poland (Warsaw/Opoczno)
- The Netherlands (Amsterdam)
- Russia (St. Petersburg)

America
- USA (Houston/TX)
- Brazil (São Paulo, Itatiba & Belem)
- Chile (Santiago de Chile)
- Mexico (Mexico-City)
- Peru (Lima)

Middle East
- Saudi Arabia (Damam)

Asia
- China (Taicang)
- South Korea
- Thailand (Rayong)
- Vietnam (Hanoi)

Africa
- South Africa (Johannesburg)

Detailed addresses
on our website

www.az-armaturen.com

Rev 1 - 05/2026 - 0 - GB - Subject to technical change without notice

www.az-armaturen.com