ARMATUREN
free of cavities & maintenance

engineered.
fast.
dynamic.

Type HDS / HDS-GL

High-pressure plug valves

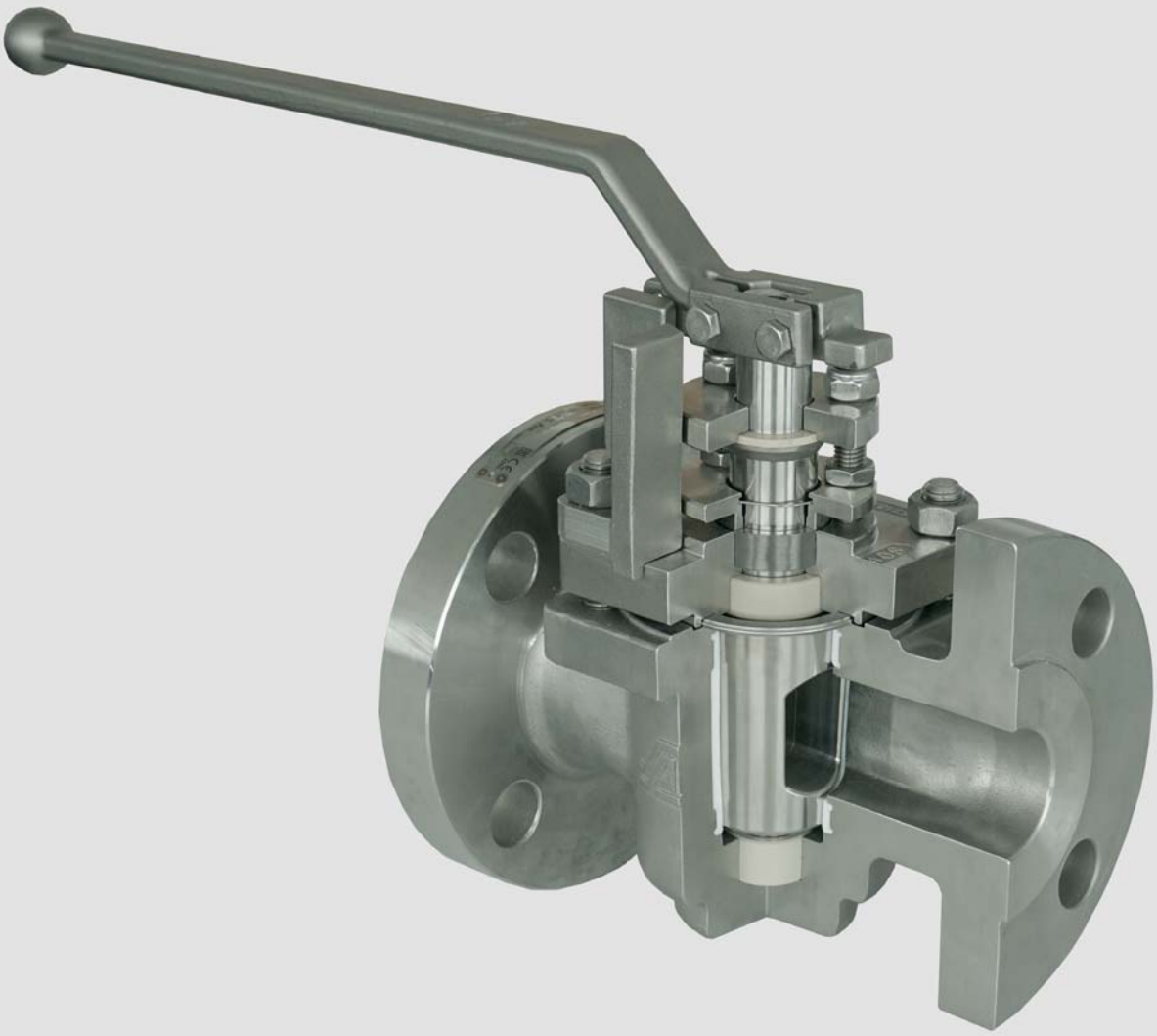

Product leaflet

Type HDS / HDS-GL
High-Pressure plug valve



Type HDS-GL
trunnion mounted design
with PEEK bearing

- **High-pressure design**
- **from DN50 / PN160 with trunnion mounted plug**

DN 15 - 600 / PN 63 - 160
NPS ½ - 24 / Class 600 - 900

Range of application:
-60 < T < 230/320°C
vacuum-capable

Design characteristics

- easy accessible adjustment of the plug and safety stem packing
- low fugitive emission in line with TA LUFT, ISO 15848 & API 641 requirements
- Fire-Safe design acc. to API 607 / ISO 10497
- mounting-flange for actuators

Options

- higher pressure rating
- heating jacket
- flushing device
- FDA compliant
- painting
- oil and grease-free assembly

PT diagram, plug types, sealing systems, material selection: see catalogue part ENGINEERING

Type overview

Type HDS / HDS-EXTRA

- sealing system FSN / CASN
- without PEEK bearing

Type HDS

- DN 15 - 100 / PN 63 - 100
- NPS ½ - 4 / Class 600

Type HDS-EXTRA

- DN 15 - 150, PN 63 - 100

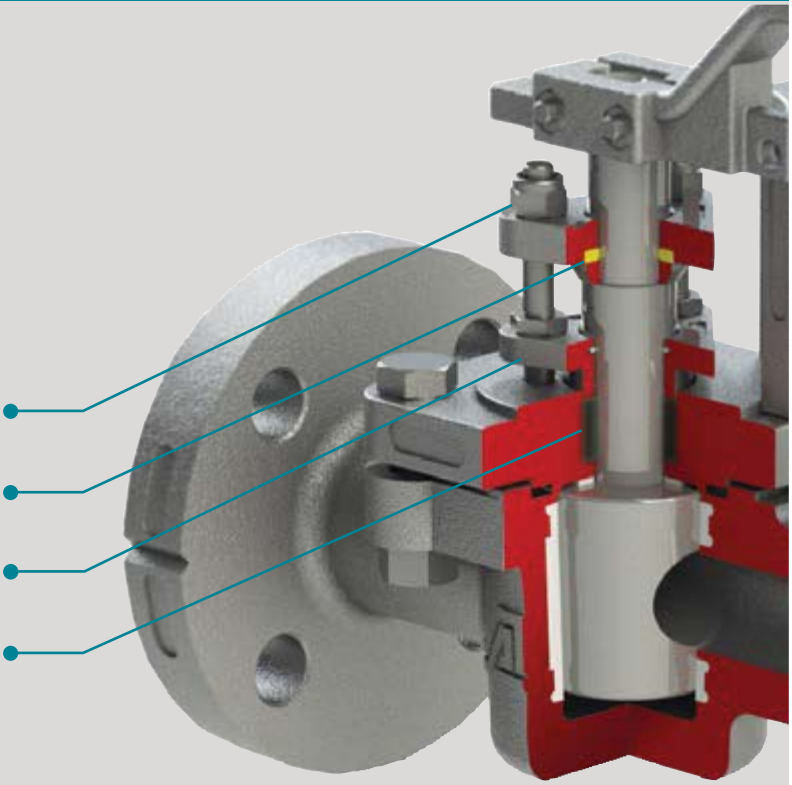

Type HDS-GL

- Sealing system FSN / CASN
- PEEK bearing ≥ DN 50 / NPS 2

Type HDS-GL

- DN 100S - 500 / PN 63 - 100
  NPS 4S - 24 / Class 600
- DN 15 - 150 / PN 160
  NPS ½ - 4 / Class 900

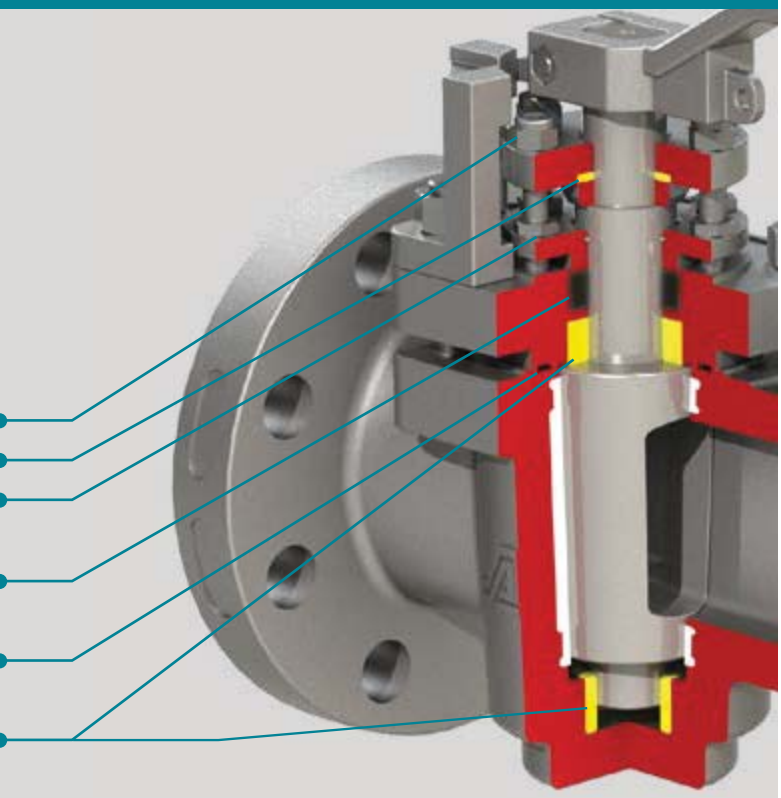

Flange dimensions acc. to DIN EN / ASME

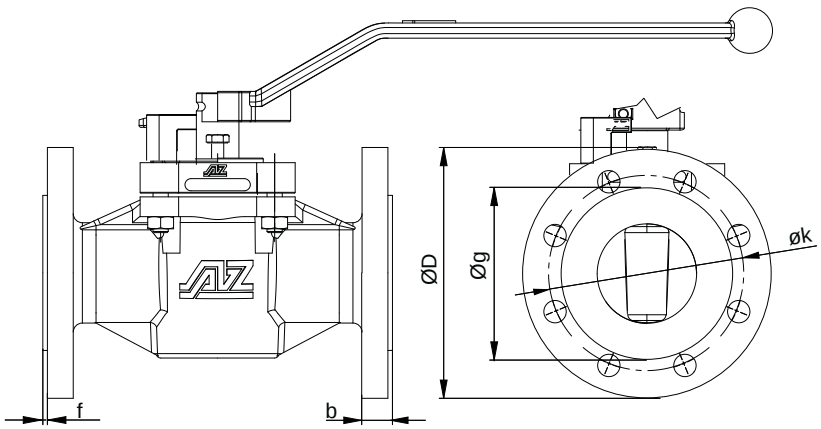

DIN EN 1092-1

DN	PN	øD [mm]	flange bore [mm] øk	St	ø	øg [mm]	b [mm]	f [mm]
15E	63 100 | 160	105	75	4	14	45	20	2
25E	63 100 | 160	140	100	4	18	68	24	2
40	63 100 | 160	170	125	4	22	88	26 26 | 28	3
50	63 100 | 160	180 195	135 145	4	22 26	102	26 28 | 30	3
80	63 100 | 160	215 230	170 180	8	22 26	138	28 32 | 36	3
100	63 100 | 160	250 265	200 210	8	26 30	162	30 36 | 40	3
100S	63 100 | 160	250 265	200 210	8	26 30	162	30 36 | 40	3
125	63 100	295 315	240 250	8	33	188	30 40	3
150	63 100	345 355	280 290	8 12	33	218	36 44	3
200	63 100	415 430	345 360	12	36	285	42 52	3
250	63 100	470 505	400 430	12	36 39	345	46 60	3
300	63 100	530 585	460 500	16	36 42	410	52 68	4
350	63 100	600 655	525 560	16	36 48	465	56 74	4
400	63 100	670 715	585 620	16	42 48	535	60 78	4
500	63 100	800 870	705 860	20	56	*	*	4

ASME B16.5

NPS	Class	øD [mm]	flange bore [mm] øk	St.	ø	øg [mm]	b [mm]	f [mm]
½	600 900	95 120	66,7 82,6	4	15,7 22,3	34,9	21,3 29,3	7
1	600 900	125 150	88,9 101,6	4	19,1 25,4	50,8	24,5 35,6	7
1½	600 900	155 180	114,3 123,8	4	22,4 28,4	73	29,3 38,8	7
2	600 900	165 215	127 165,1	8	19,1 25,4	92,1	32,4 45,1	7
3	600 900	210 240	168,3 190,5	8	22,4 25,4	127	38,8 45,1	7
4	600 900	275 290	215,9 235,0	8	25,4 31,7	157,2	45,1 51,5	7
4S 5	600	275 330	215,9 266,7	8	25,4 28,4	157,2 185,7	45,1 51,5	7
6 8	600	355 420	292,1 349,2	12	28,4 31,8	215,9 269,9	54,7 62,6	7
10 12	600	510 560	431,8 489,0	16 20	35,1 35,1	323,8 381,0	70,5 73,7	7
14 16	600	605 685	527,0 603,2	20	38,1 41,1	412,8 469,9	76,9 83,2	7
18 20	600	745 815	654,0 723,9	20 24	44,5	533,4 584,2	89,6 95,9	7
24	600	940	838,2	24	50,8	692,2	108,6	7

Type HDS

PN 63 - 100 / Class 600, Fire-Safe sealing FSN

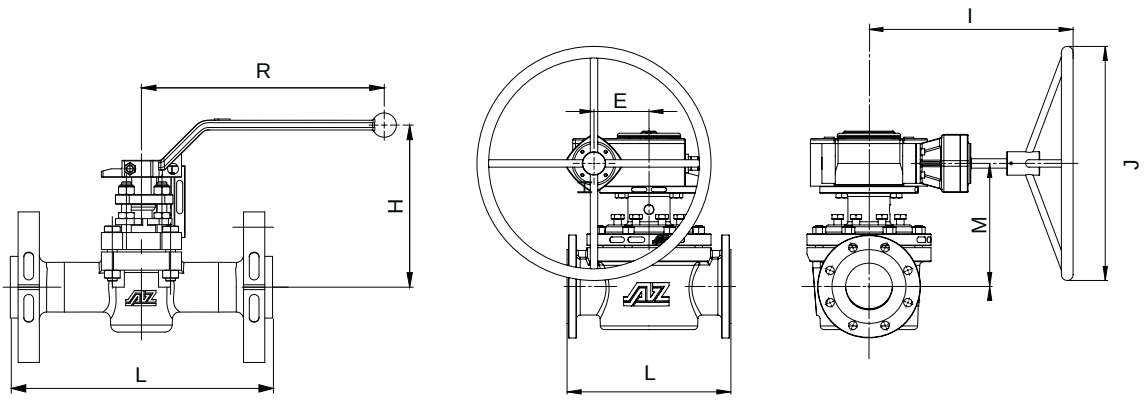

	DN	PN	L [mm]	R [mm]	H [mm]	SW [mm]	torque* [Nm]	weight [kg]	K_{VS} [m³/h]	C_V [US.gal/min]
DIN EN 558-1	15E	63-100	210	200	125	11	45	5,6	12	14
	20	63-100	210	200	125	11	45	6,9	13	15
	25E	63-100	230	200	135	11	90	10,1	53	62
	40	63-100	200	320	135	14	100	13,5	85	98
	50	63-100	230	420	195	19	180	25,0	126	146
	80	63-100	310/356	600	210	22	280	45,6	275	317
	100	63/100	350/432	600	210	22	280	56,0	197	228
	NPS	**Class**	**L [mm]**	**R [mm]**	**H [mm]**	**SW [mm]**	**torque* [Nm]**	**weight [kg]**	**K_{VS} [m³/h]**	**C_V [US.gal/min]**
ASME B 16.10	½E	600	165	200	125	11	45	4,2	13	16
	¾	600	216	200	135	11	45	5,5	22	25
	1	600	216	200	135	11	45	10,0	26	31
	1½	600	241	320	135	14	100	15,5	79	92
	2	600	292	420	195	19	180	24,6	139	161
	3	600	356	600	210	22	280	46,8	228	264
	4	600	432	600	210	22	280	71,0	198	229

* inclusive 100% safety factor for actuator

Type HDS-EXTRA

PN 63 - 100, Fire-Safe sealing FSN

	DN	PN	L [mm]	R [mm]	H [mm]	gearbox E	I	J	M	Type	SW [mm]	torque* [Nm]	weight [kg]	K_{VS} [m³/h]	C_V [US.gal/min]
DIN EN 558-1	15E	63-100	210	200	102,2						11	45	5,6	12	14
	25E	63-100	230	320	119							80		53	62
	32E	63-100	260	420	137							140		95	110
	40E	63-100	260	420	145							240		173	200
	50E	63-100	300	585	150							350		282	327
	65E	63	290			68,8	265	400	243	Q 800-S		500		569	658
	80E	63	310			68,8	365	400	248	Q 800-S		600		947	1095
	100E	63	430			137,5	365	600	270	Q6500-S		2000		1319	1525
	150E	63	550			13705	365	600	315	Q6500-S		4000		3155	3647

* inclusive 100% safety factor for actuator

Type HDS-GL

PN 63 - 100 / Class 600, Fire-Safe sealing FSN

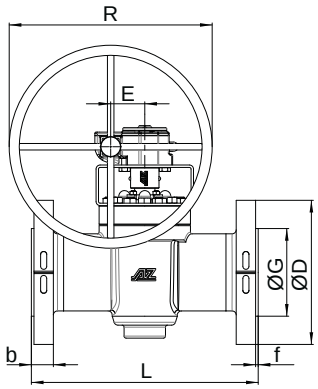

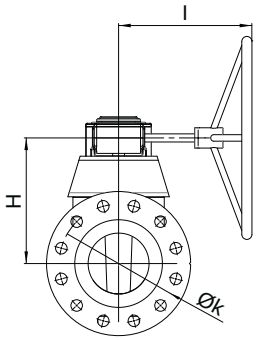

	DN	PN	L [mm]	gearbox (Pro-Gear) E	R	H	I	Type	torque* [Nm]	weight [Kg]	K_{VS} [m^3/h]	C_V [US.gal/min]
DIN EN 558-1	100S	63 100	350	69	300	270	275	Q800-S	600	**	**	**
	125	63 100	400	84	400	297	290	Q1500-S	1170	**	865	1000
	150	63 100	350 550	84	400	297	290	Q1500-S	1170	**	875	1011
	200	63 100	400 600	96,5	600	340	350	Q3000-S	1560	**	1770	2047
	250	63 100	450 730	137,5	600	395	465	Q6500-S	1950	**	1949	2261
	300	63 100	500 850	137,5	600	415	465	Q6500-S	3380	**	2618	3027
	350	63 100	** 980	137,5	600	485	465	Q6500-S	7150	**	5070	5861
	400	63 100	** 1100	137,5	600	500	465	Q6500-S	7150	**	4694	5426
	500	63 100	** 1250	180	600	545	520	Q12000-S	8320	**	10260	11862
	NPS	**Class**	**L [mm]**	**gearbox (Pro-Gear) E**	**R**	**H**	**I**	**Type**	**torque* [Nm]**	**weight [Kg]**	**K_{VS} [m^3/h]**	**C_V [US.gal/min]**
ASME B 16.10	4S	600	462	69	300	270	275	Q800-S	600	**	**	**
	5	600	508	84	400	297	290	Q1500-S	1170	**	**	**
	6	600	559	84	400	297	290	Q1500-S	1170	**	775	896
	8	600	660	96,5	600	340	350	Q3000-S	1560	**	1978	2286
	10	600	787	137,5	600	395	465	Q6500-S	1950	**	2382	2754
	12	600	838	137,5	600	415	465	Q6500-S	3380	**	1925	2225
	14	600	889	137,5	600	485	465	Q6500-S	7150	**	2394	2768
	16	600	991	137,5	600	500	465	Q6500-S	7150	**	4818	5339
	18	600	1092	180	600	520	520	Q12000-S	8320	**	12427	14367
	20	600	1194	180	600	545	520	Q12000-S	9750	**	11841	13689

* Manufacturer recommended sizing torque (incl. 100% safety)

** on request

Type HDS-GL

PN 160 / Class 900, Fire-Safe sealing FSN

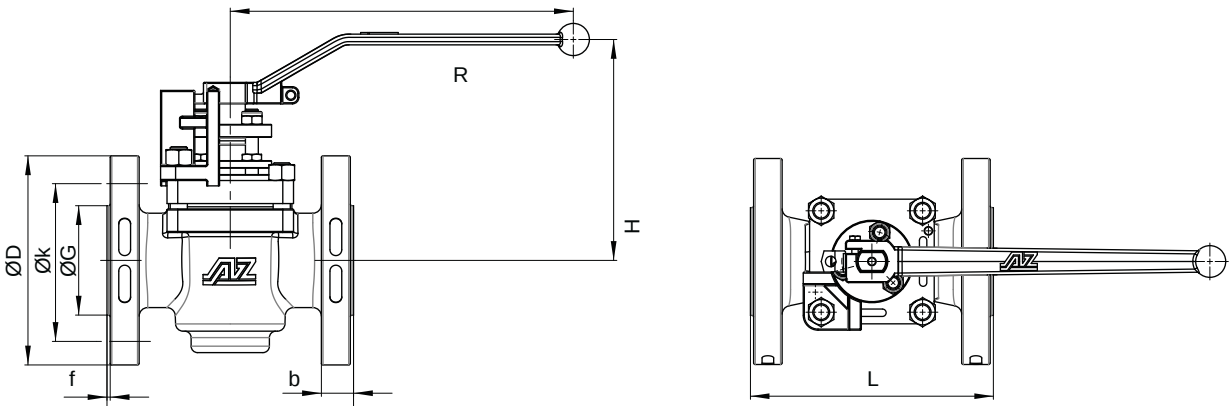

	DN	PN	L [mm]	R [mm]	H [mm]	SW [mm]	torque* [Nm]	weight [Kg]	K_{VS} [m³/h]	C_V [US.gal/min]
DIN EN 558-1	15E	160	210	200	125	11	55	5,6	12	14
	20	160	210	200	125	11	55	8,2	13	15
	25E	160	230	200	135	11	100	10	53	62
	40	160	200	320	135	14	120	14	85	98
	50	160	230/300	420	195	17	200	26	126	146
	80	160	282	600	210	22	300	48	275	317
	100	160	305	600	210	22	300	59	197	228
	150	160	600	***	***	36	2160	189	875	1011
	NPS	**Class**	**L [mm]**	**R [mm]**	**H [mm]**	**SW [mm]**	**torque* [Nm]**	**weight [Kg]**	**K_{VS} [m³/h]**	**C_V [US.gal/min]**
ASME B 16.10	½E	900	216	200	125	11	55	4,2	13	16
	¾	900	216	200	125	11	55	6,6	22	25
	1	900	254	200	135	11	55	10	26	31
	1½	900	305	320	135	14	120	156	79	92
	2	900	368	420	195	17	200	26	139	161
	3	900	381	600	210	22	300	49	228	264
	4	900	457	600	210	22	300	75	198	229
	6	900	610	***	***	36	2160	211	875	1011

Counter-bearing from DN50 / NPS2“

* manufacturer recommended sizing torque (incl. 100% safety)

** on request

*** version with gearbox, data on request

Other sizes on request

AZ-plug valve: the design principle

Key advantages

- free of cavities
- no contamination of process media
- adjustability of the plug and sealings
- maintenance-free due to self-lubricating and chemical-resistant PTFE-sleeve
- low emission design
- constant torque (Δp independent !)
- vacuum-capable

Tapered plug

- plug pressed into the PTFE-sleeve
- polished surface

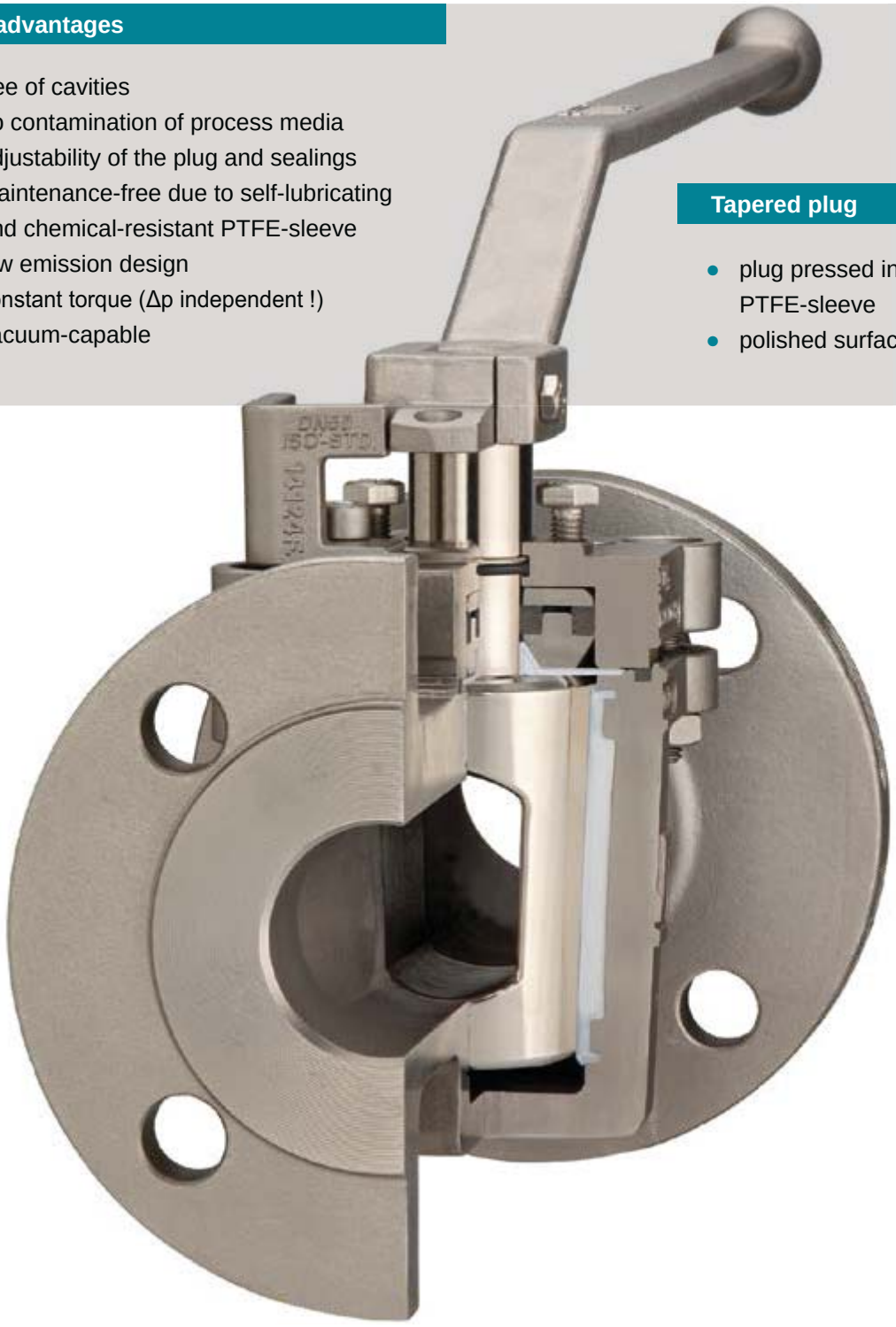

Body

- tapered body interior
- integrated supporting ribs avoid rotation and coldflow of the sleeve
- large sealing surface

PTFE-sleeve

- mechanically locked into the valve body
- complete PTFE chambering
- robust, one-piece sleeve covers and protects the entire plug



Cavity-free: suitable for all media
Technical comparison

AZ-plug valve	Ball valve
Soft seated plug valve with PTFE-sleeve **Main sealing components** • metallic plug • sleeve 	**Soft seated ball valve with PTFE sealing rings, floating ball** **Main sealing components** • metallic ball • sealing rings 
OPEN position	
• suitable for all media due to cavity-free design • sealing surfaces are completely protected free of cavities 	• critical for the following media due to design with cavities ○ corrosives: crevice corrosion ○ polymerizing: clogging ○ crystallizing: abrasion / clogging  cavities cavities 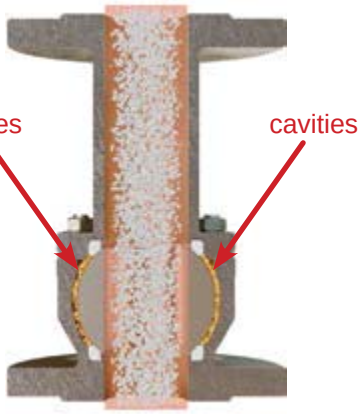
During operation	
• free of cavities, media cannot settle or be trapped • solids are pushed away • no contamination with old media 	• with cavities, media can settle or be trapped • solids cause abrasion of the sealing rings • contamination of process media 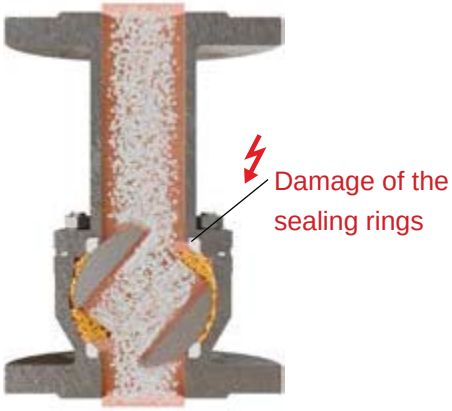 Damage of the sealing rings

Safe and reliable tightness for years

Adjustable



- tapered plug design allows retightening of the sealing on site - if needed
- adjusting bolt even accesible with mounted actuator / gearbox

Several sealings to atmosphere

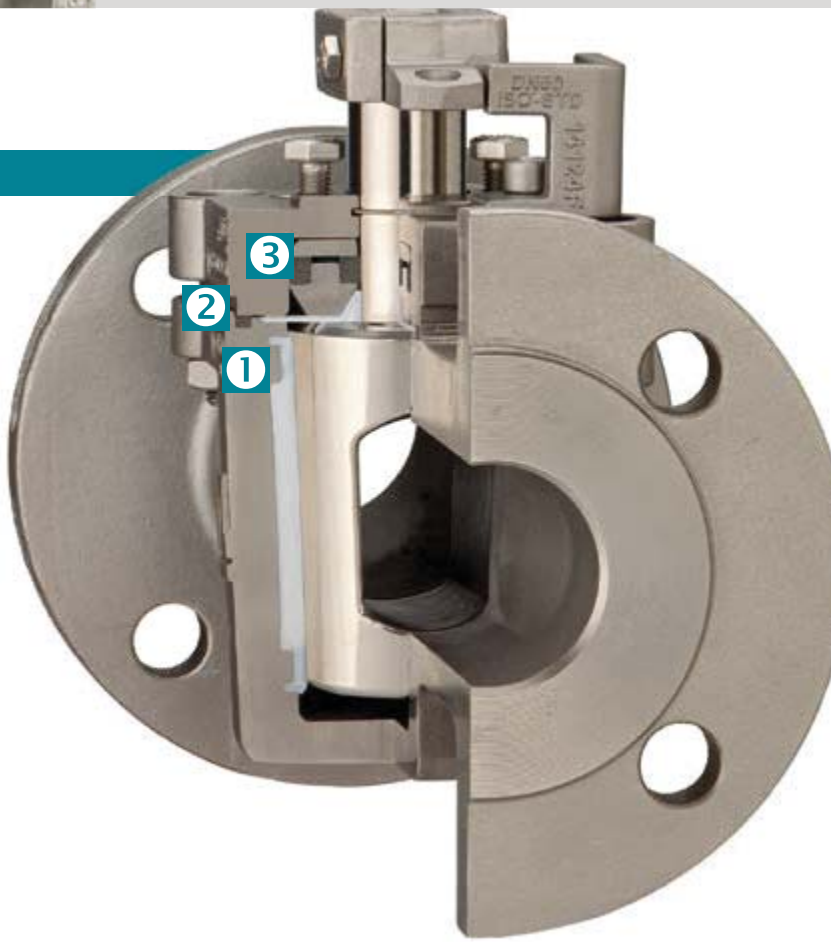

① Primary: sleeve
② Secondary: V-diaphragm / cover seal
③ Tertiary: stem packing (optional)

Detailed information about all certified AZ cover & stem sealing systems see chapter SEALING SYSTEMS

ISO cover

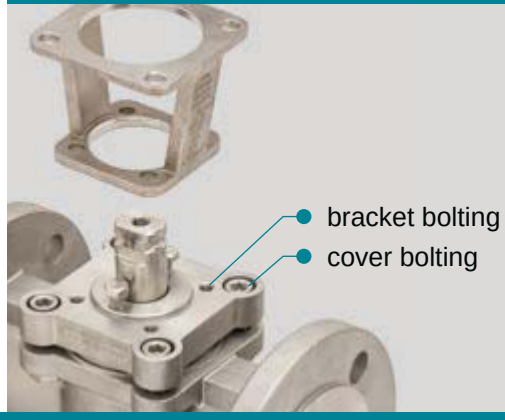

- pressure containing cover bolts separated from bracket boltings
- cover and bracket acc. to ISO 5211 for efficient actuator / gearbox assembly

Reduced and full bore design

Execution

Reduced bore
Type STANDARD

- compact valve (FF / weight)
- optimal torques for economic automation

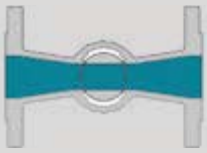



Full round bore
Type EXTRA

- maximum flow rate
- minimal pressure drop
- piggable (optional)

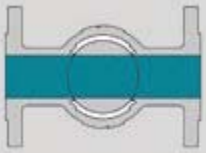



Type ISO-EXTRA

- excellent for abrasive, slurry and solid-containing applications
- maximum flow rate compared to other valve types with the same nominal size



Maximum flow rate

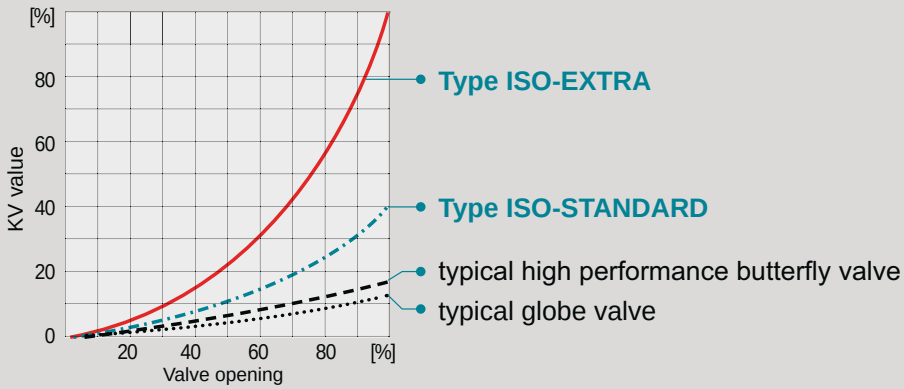

Options



Multi-port

- whole range of multi-port plugs for all configurations (up to 7-way)
- horizontal and vertical installation



Vented options

- plug bottom
- plug upstream / downstream

automatic pressure balance in case of thermal media expansion



System requirements

- **FDA** = Food and Drug Administration certifications and compliant materials
- **GMP** = Good-Manufacturing-Practice
- **CIP** = Clean-in-Place
- Polished internal surfaces, surface finish <0.8 Ra µm (<32 Ra µin)
- oil and grease free
- water-free



All connections possible

- flanges acc. to DIN, ASME, JIS etc.
- welded ends
- screwed and threaded ends
- combinations of connections
- oversize flanges
- compression fittings and ferrule ring couplings
- special connections



High and low temperature

- extended bonnet with sealing at the top
- stem extension for insulated valves

Modular operation concept

Bracket according to ISO 5211

- standard installation of gearbox and actuator
- safe due to independent mounting of cover and bracket
- covering bonnet bolts to prevent opening of valve in service
- precise centering of the bracket to the plug stem due to adjusting ring
- easy inline plug adjustment during the process, screws are always accessible

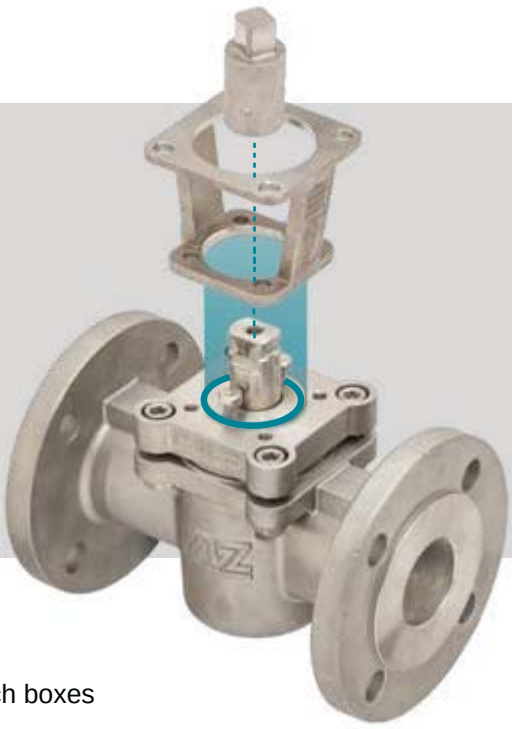

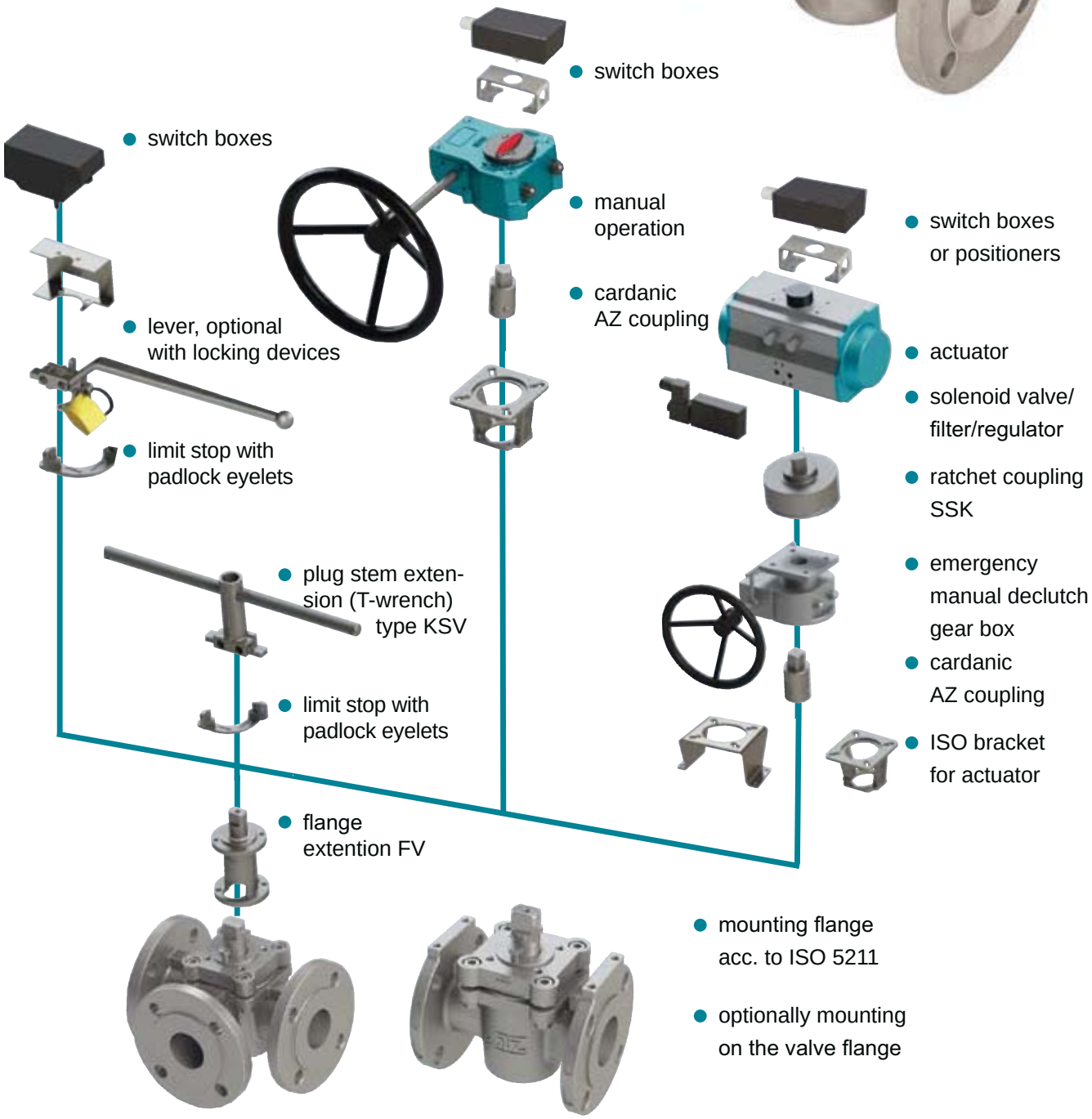

Cover and stem sealing systems suitable for general applications

Type STANDARD



- plug adjustment
- thrust collar
- cover sealing (PTFE)
- stainless steel diaphragm
- **Secondary sealing**: V-diaphragm (PTFE), delta thrust collar (PTFE)
- **Primary sealing**: sleeve*

Type FS2 — Fire-Safe-sealing (API 607)

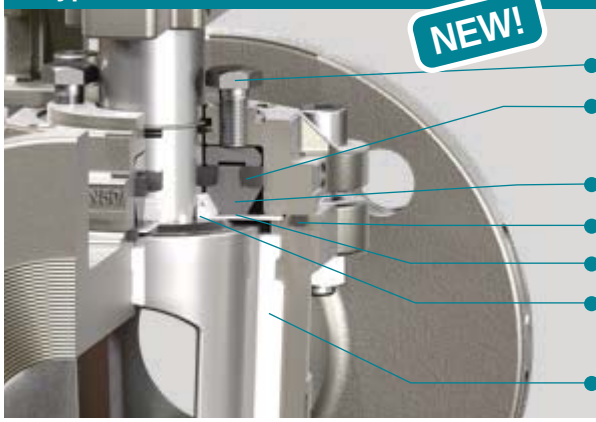

- plug & packing adjustment
- **Tertiary sealing**: Packing to atmosphere (graphite)
- thrust collar
- cover sealing (graphite)
- stainless steel diaphragm
- **Secondary sealing**: V-diaphragm (PTFE) and delta thrust collar (PTFE)
- **Primary sealing**: sleeve*

Type CA2 — Chemistry sealing



- plug & packing adjustment
- **Tertiary sealing**: Packing to atmosphere (PTFE)
- thrust collar
- cover sealing (PTFE)
- stainless steel diaphragm
- **Secondary sealing**: V-diaphragm, delta thrust collar (PTFE)
- **Primary sealing**: sleeve*

*) The sleeve material has a decisive influence on the maximum operating temperature
Material selection acc. to PT-diagram

More safety
for severe applications

engineered.
fast.
dynamic.

Type FSN — Fire-Safe-sealing (API 607)

plug adjustment
triple safety stem packing adjustment
Tertiary sealing: triple safety stem packing (graphite)

Secondary sealing:
V-diaphragm (PTFE) and delta thrust collar (PTFE)

cover sealing (graphite)
Primary sealing: sleeve*

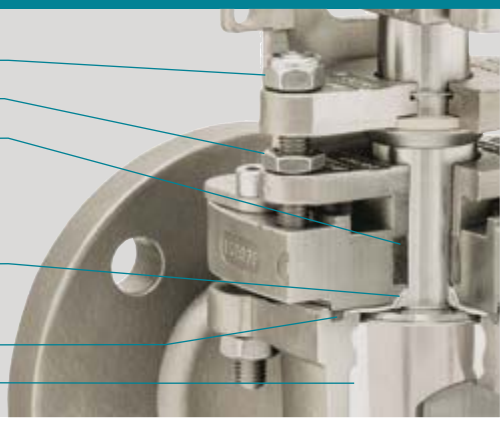

Type FSN-EF — Fire-Safe-sealing (API 607)

NEW!

Emission Free

plug adjustment
triple safety stem packing adjustment
Quaternary sealing: three o-rings at the stem
Tertiary sealing:
triple safety stem packing
Secondary sealing:
V-diaphragm (PTFE) and delta thrust collar (PTFE)
cover sealing (graphite)
Primary sealing: sleeve*



Type FSN-SL — Fire-Safe-sealing (API 607)

live-loaded

plug adjustment
o-rings protect the springs against corrosion
triple safety stem packing adjustment
disk springs (optionally made of Inconel)
Tertiary sealing: triple safety stem packing (graphite)
Secondary sealing:
V-diaphragm (PTFE) and delta thrust collar (PTFE)
cover sealing (graphite)
Primary sealing: sleeve*

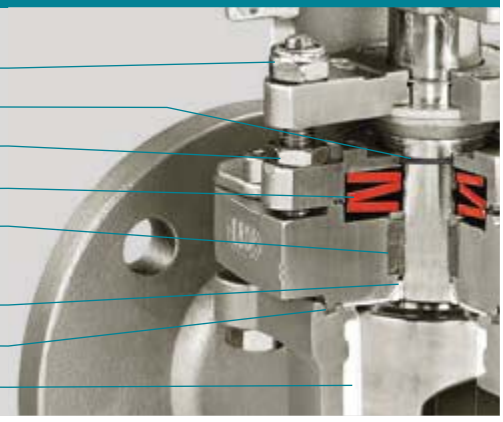

*) The sleeve material has a decisive influence on the maximum operating temperature
Material selection acc. to PT-diagram

Material for **type CASN** and **CASN-SL** chemistry safety sealing: packing and cover sealing in PTFE

Special sealing systems

Chevron packing

- increases the contact pressure (when pressure builds up on the safety stem packing towards plug stem)
- for toxic and fugitive media
- high wear resistance



Type CL Chlorine / gas applications

- approved for chlorine applications and other toxic gases
- ideal for media with changing state of aggregate (e.g. liquid to gas, vice versa)
- vacuum capable



Detection ports for monitoring purpose of lethal gases (phosgene, etc.)

- detection ports for early recognition of potential leakages
- sniffing at sealing surfaces to atmosphere



WORLD'S FIRST EMISSION FREE
plug valve certified acc. to **ISO 15848-1 /** AH
Type FSN-EF

NEW!



Low-Emission
according ISO 15848, TA-Luft & API 641



For all important information about ISO 15848, TA-Luft & API 641, as well as the current certificates, please refer to the "AZ Fugitive Emission" brochure

Latest information about ISO 15848 / API 641 / TA Luft see AZ Fugitive Emissions leaflet



Casting materials



		Casting Material					
Material Group	**Common Name**	**EN / DIN**	**Short name**	**Material-No.**	**ASTM**	**Grade**	**UNS**
Carbon Steel / Ductile Iron							
Ductile Iron	SG Iron	EN 1563	EN-GJS-400-18-LT	5.3103	A395	-	F32800
Carbon Steel	CS	EN 10213	GP240GH	1.0619	A216	WCB	J03002
Low Temp. Carbon Steel	LTCS	EN 10213	G17Mn5	1.1131	A352	LCB	J03003
Low Temp. Carbon Steel	LTCS	EN 10213	G21Mn5	1.1138	A352	LCC	J02505
Stainless Steel							
Stainless Steel	Duplex 2205	EN 10213	GX2CrNiMoN22-5-3(4A)	1.4470	A995	4A-CD3MN	J92205
Stainless Steel	Duplex 1B	EN 10213	GX3NiCrMoCuN26-6-3-3	1.4517	A995	1B-CD4MCuN	J93372
Austenitic	SS	EN 10213	GX5CrNi19-10	1.4308	A351	CF8	J92600
Austenitic	SS	EN 10213	GX2CrNi19-11	1.4309	A351L	CF3	J92700
Austenitic	SS	EN 10213	GX5CrNiMo19-11-2	1.4408	A351	CF8M	J92900
Austenitic	SS	EN 10213	GX2CrNiMo19-11-2	1.4409	A351	CF3M	J92800
Super Austenitic	Alloy 20	EN 10213	NiC420CuMo	1.4500	A351	CN7M	N08007
Super Austenitic	Alloy 20 mod.	EN 10213	GX2NiCrMoCuN25-20	1.4536	A743	CN7MS	J94650
Super Austenitic	AL6XN	-	-	-	A351	CN3MN	J94651
Superduplex	Superduplex 5A	EN 10213	25Cr-7Ni-Mo-N	1.4469	A995	CE3MN	J93404
Nickel Alloy							
	Monel/Alloy400	DIN 17730	G-NiCu30 Nb	2.4365	A494	M35-1	N24135
	Hastelloy C mod.	-	-	-	A494	CW6M	N30107
	Hastelloy C	-	-	2.4537	A494	CW12MW	N30002
	Hastelloy C-276	-	-	2.4883	-	-	-
	Hastelloy B-3	-	-	-	-	-	-
	Inconel 600	-	-	-	A494	CY40	N06040
	Inconel 625	-	-	-	A494	CW6MC	N26625
	Inconel 825	-	-	-	A494	CU5MCuC	N08826
	Nickel	DIN 17730	G-Ni 95	2.4170	A494	CZ100	N02100
Other Material Groups							
Tantalum	Tantalum	-	-	-	-	-	-
Titanium	Ti 2	DIN 17865	G-Ti 2	3.7031	B367	C-2	R52550
Zirconium	Zirconium 702	-	-	-	B752	702C	-
Zirconium	Zirconium 705	-	-	-		705C	-

All rights reserved, all indications without engagement, subject to modifications.

The use of these equivalents has to be evaluated on a case-by-case basis.

Other materials on request.

Equivalent forged and bar-stock materials





			Similar Forged Material						Bar Material	
Common Name	**Mat.Nr.**	**Grade**	**EN / DIN**	**Short Name**	**Mat.Nr.**	**ASTM**	**Grade**	**UNS**	**ASTM**	**Short**
Carbon Steel / Ductile Iron										
SG Iron	5.3103	-	EN 1563	EN-GJS-400-18-LT	5.3103	A395-99	60-40-18	-	-	-
CS	1.0619	WCB	EN 10213	GP240GH	1.0619	A105	A105	-	-	-
LTCS	1.1131	LCB	-	-	-	A350	LF2-Class1	G10300	-	-
LTCS	1.1138	LCC	-	-	1.0566	A350	LF2-Class1	G10250	-	-
Stainless Steel										
Duplex 2205	1.4470	4A-CD3MN	EN 10028-7	X2CrNiMoN22-5-3	1.4462	A182	F51	S32205	A479	S31803
Duplex 1B	1.4517	1B-CD4MCuN	EN 10028-7	X2CrNiMoCuN25-5-3	1.4507	A182	F59	S32520	A479	S32550
SS	1.4308	CF8	EN 10028-7	X5CrNi18-10	1.4301	A182	F304	S30400	A276	304
SS	1.4309	CF3	EN 10028-7	X2CrNi19-11	1.4306	A182	F304L	S30403	A276	304L
SS	1.4408	CF8M	EN 10028-7	X5C4NiMo17-12-2	1.4401	A182	F316	S31600	A276	316
SS	1.4409	CF3M	EN 10028-7	X2CrNiMo 17-12	1.4404	A182	316L	S31603	A276	316L
Alloy 20	1.4500	CN7M	-	-	2.4660	B462	N08020	N08020	B473	N08020
Alloy 20 mod.	1.4536	CN7MS	-	-	-	-	-	-	-	-
AL6XN	-	CN3MN	EN 10028-7	X1NiCrMoCuN25-20-7	1.4529	A182	F62	N08367	B462	N08367
Superduplex 5A	1.4469	CE3MN	EN 10028-7	X2CrNiMoN25-7-4	1.4410	A182	F63	S32615	-	-
Nickel Alloy										
Monel/Alloy400	2.4365	M35-1	DN 17744	NiCu30Fe	2.4360	B165	Alloy 400	N04400	B164	N04400
Hastelloy C mod.	-	CW6M	-	-	-	A494	-	-	-	-
Hastelloy C		CW12MW	-	NiMo16CrW	-	A494	-	-	-	-
Hastelloy C-276		-	DIN 17744	NiMo16Cr15W	2.4819	B565	N10675	N10276	B574	N10276
Hastelloy B-3	-	-	DIN 17744	NiMo29Cr	2.4600	B565	N10675	N10675	B335	N10675
Inconel 600	-	CY40	DIN 17742	NiCr15Fe	2.4816	B565	N06600	N06600	B166	N06600
Inconel 625	-	CW6MC	DIN 17744	NiCr22Mo9Nb	2.4856	B565	N06625	N06625	B446	N06625
Inconel 825	-	CU5MCuC	DIN 17744	NiCr21Mo	2.4858	B564	N08825	N08825	B425	N08825
Nickel	2.4170	CZ100	-	-	-	-	-	-	B160	N02200
Other Material Groups										
Tantalum	-	-				B365	TaW2,5	R05252	-	-
Ti 2	3.7031	C-2	DIN 17864	Grade 2	3.7035	B381	F2	R50400	B348	Grade 2
Zirconium 702	-	702C	-	-	6.0702	B493	R60702	R60702	B550	R60702
Zirconium 705	-	705C	-	-	-	B493	R60705	R60705	B550	R60705

All rights reserved, all indications without engagement, subject to modifications.

The use of these equivalents has to be evaluated on a case-by-case basis.

Other materials on request.

Sleeve materials / Lining materials



Type	UHMW-PE	PFA	PTFE, virgin	PTFE, glass	PTFE, graphite	TFM	PTFE-P
T_{max}	80°C / 176°F	200°C / 392°F	230°C / 446°F	230°C / 446°F	250°C / 482°F	250°C / 482°F	320°C / 608°F

Category	Sleeve Material	Characteristics	Typical applications	T_{MAX}
PTFE	PTFE, virgin	low friction, very good sealing characteristic	standard sleeve material for most applications	230°C / 446°F
RPTFE	PTFE-Glass	reinforced PTFE	additional stability for multiway valves with horizontal ports	230°C / 446°F
	PTFE-Graphite	reinforced PTFE	high temperature applications	250°C / 482°F
modified PTFE	TFM 1600* NXT 75* M 111*	chemically modified PTFE, reduced permeation, low friction	chemical applications where reduced permeability compared to PTFE is required	250°C / 482°F
Special Sleeves	PTFE-P* NFCE* NCS*	high performance sleeve materials	severe service highest temperatures, high pressure, abrasive applications	320°C / 608°F
PFA	PFA	reduced permeation	chemical applications where reduced permeability compared to PTFE is required	200°C / 392°F
UHMW-PE	UHMW-PE	Ultra High Molecular Weight Polyethylene	radiation resistent, abrasive application	80°C / 176°F

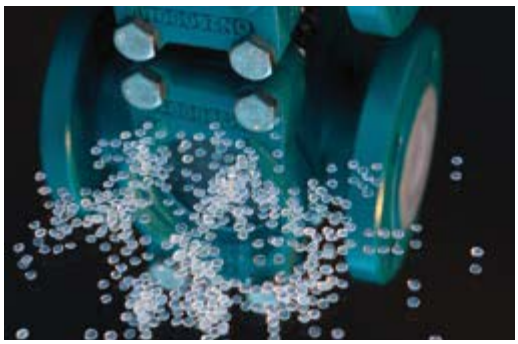

Combination of linings		
body lining	plug lining	T_{max}
PFA	PTFE [1]) or special materials	210°C / 410°F
PFA	PFA	200°C / 392°F
PFA conductive	PFA conductive	125°C / 256°F

1) Plugs with PTFE lining only for two-way valves up to DN 100.
Plugs for multi-way valves not with PTFE lining available.

IMPORTANT NOTE

For demanding conditions, such as process temperatures exceeding 200°C / 392°F (sleeved valve) respectively 150°C / 302°F (lined valve), valve size, media phase, plug position & temperature (constant or fluctuating) may have an impact on the lifetime. Consult factory for proper selection of material and sealing system.

Torques: Factors for different material combinations and sealing systems

Torque for actuator sizing

- Torque values for actuator sizing can be found in the tables of each valve model. These values apply for the sealing systems STANDARD, CA2 as well as FS2 and are based on virgin PTFE sleeve material.
- For other sealing systems, sleeve materials and material combinations, different factors apply as per charts below.
- The given torque values are based on long term records and experimental results. Please consult manufacturer for process media with degreasing effect.

	Sealing system			
sleeve materials for plug valves	STANDARD, FS2, CA2	STANDARD, FS2, CA2 oil and grease-free	CASN, FSN, -SL, -EF	CASN, FSN, -SL, -EF oil and grease-free
PTFE, virgin	1,0	1,3	1,3	1,6
TFM / NXT / M111	1,1	1,4	1,4	1,7
PTFE-"P" / NFCE / NCS	1,5	1,8	1,8	2,1
PTFE-Glass	1,7	2,0	2,0	2,3
PTFE-Graphite	1,7	2,0	2,0	2,3
PFA	2,0	2,3	2,3	2,6
UHMW-PE	2,5	2,8	2,8	3,1

material combinations for linded plug valves		Sealing system	
Body	plug	CA2A / SAFE-LINED / -SL	CA2A / SAFE-LINED / -SL oil and grease-free
PFA	PTFE	according product table (M_{BT} / $M_{1,3}$ / $M_{1,5}$)	1,3
PFA	PFA		1,3
PFA-conductive	PFA-conductive	on request	on request
PFA	special material	on request	on request

Sample calculation

Model F-2 ISO-FS2 - DN50

- breakaway torque (table column $M_{1,3}$ with 30 % safety on breakaway torque)
- cover and stem sealing system FS2
- sleeve material PTFE-Glass

Torque table column $M_{1,3}$	137 Nm
Factor as per table above	1,7
Torque for actuator sizing	137 * 1,7 = **233 Nm**

PT Diagram, PN 16 - PN 100
PTFE sleeved plug valves

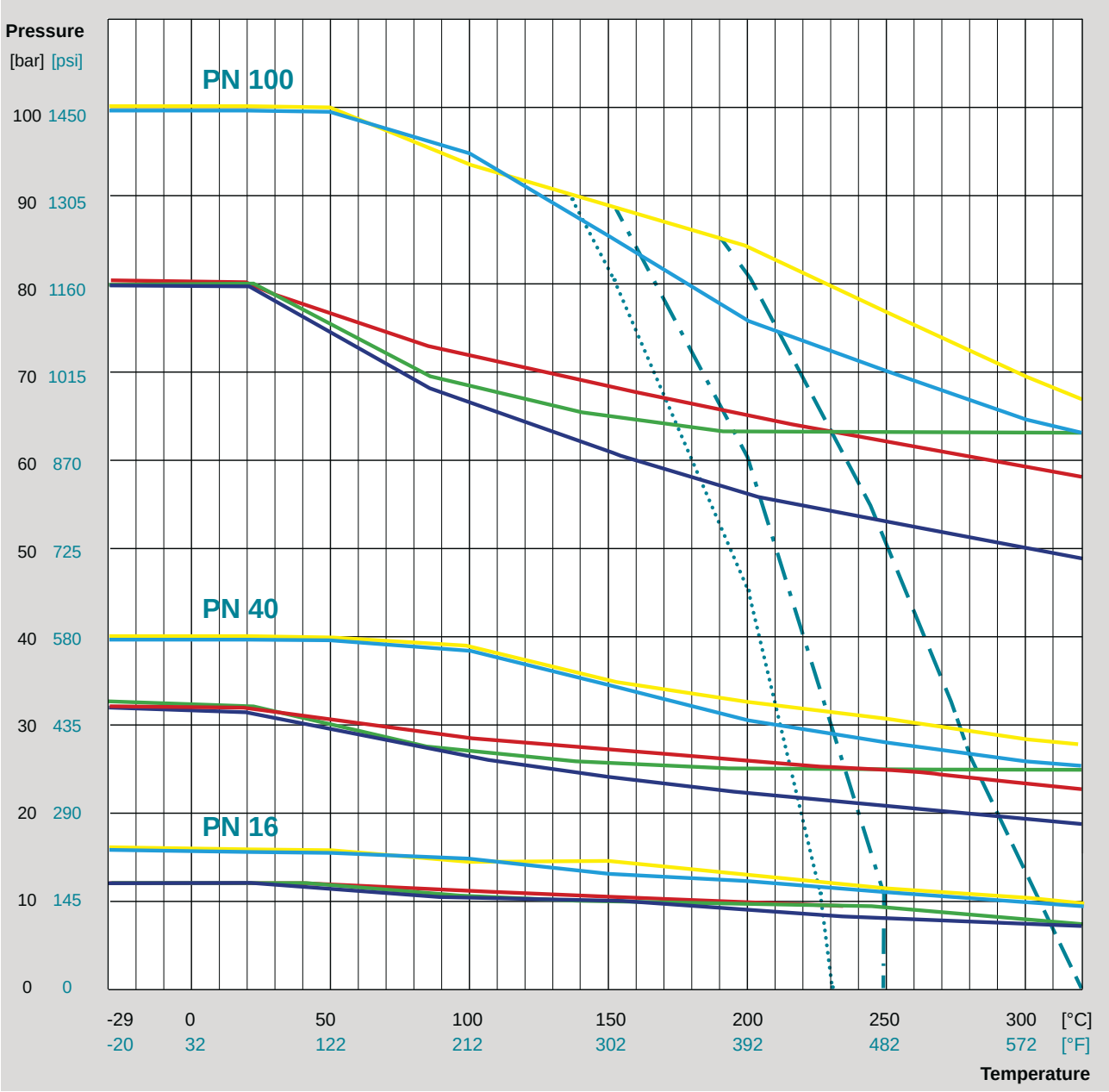

Body material

- EN 10213 - 1.0619 / Carbon Steel
- EN 10213 - 1.4408 / Stainless Steel
- EN 17744 - 2.4819 / Hastelloy
- EN 17730 - 2.4365 / Monel 400
- UNS N08007 - 1.4500 / Alloy 20

other body materials on request

Sleeve material

PTFE (virgin) / PTFE (glass)	T_{max} 230°C / 446°F
TFM / NXT / M111 / PTFE graphite	T_{max} 250°C / 482°F
PTFE-P / NFCE / NCS	T_{max} 320°C / 608°F

other sleeve materials on request

Subject to technical change without notice.

The data given are max. values according to EN 12516-1 and EN 1092-1.

IMPORTANT NOTE

for demanding conditions, such as process temperatures exceeding 200°C / 392°F: Valve size, media phase, plug position & temperature (constant or fluctuating) may have an impact on the lifetime. Consult factory for proper selection of sleeve material, cover sealing type and special features.

For temperatures < -29°C / -20°F, (T_{limit} = -60°C / -76°F) operating temperature, low-temperature carbon steel or austenitic stainless steels are required.

PT Diagram, Class 150 - Class 600
PTFE sleeved plug valves

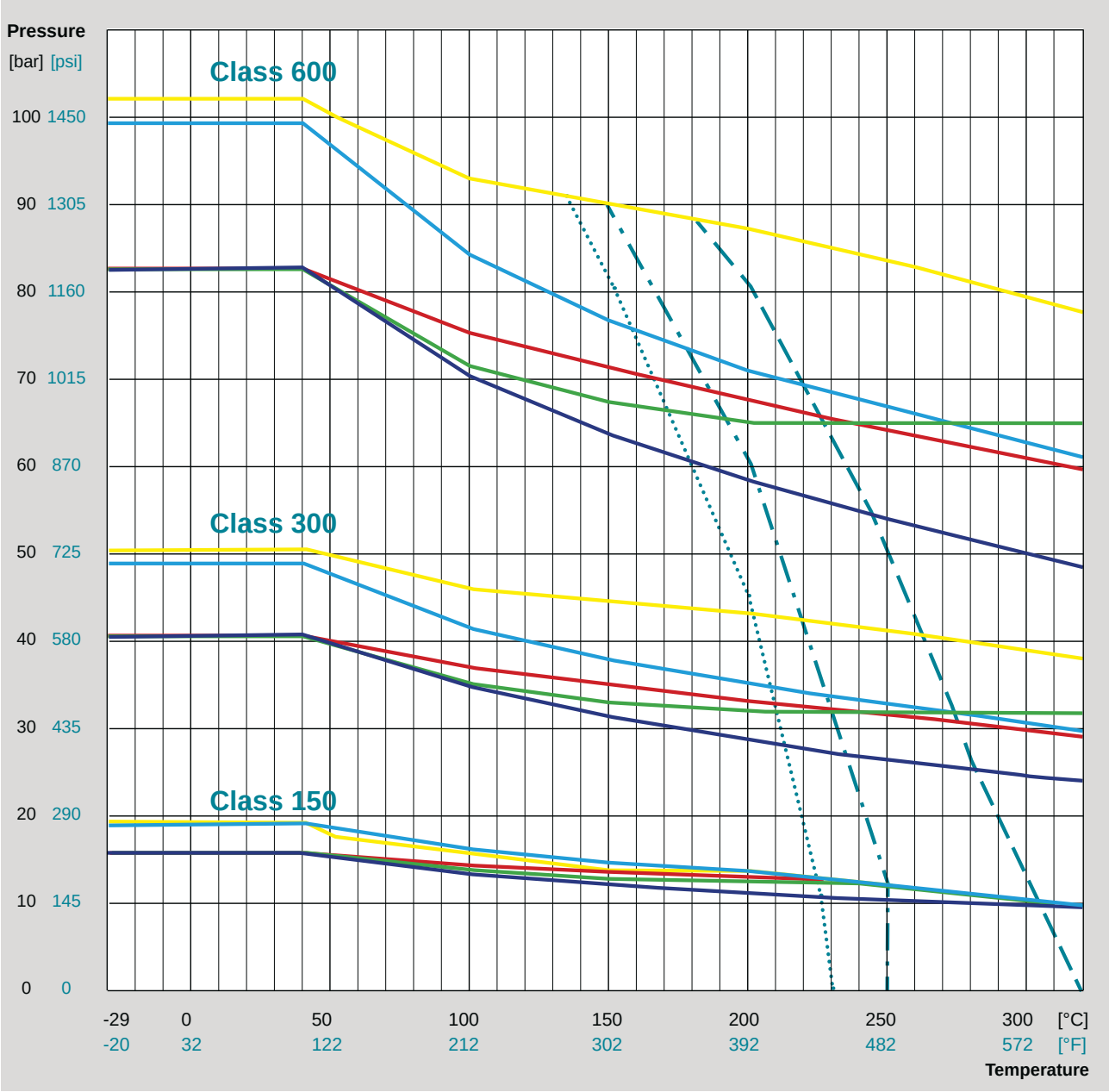

Body material

- ASTM A216 - WCB
- ASTM A351 - CF8M
- ASTM A494 - CW12MW / Hastelloy
- ASTM A494 - M35.1 / Monel 400
- ASTM A351 - CN7M Alloy 20

other body materials on request

Sleeve material

PTFE (virgin) / PTFE (glass)	T_{max} 230°C / 446°F
TFM / NXT / M111 / PTFE graphite	T_{max} 250°C / 482°F
PTFE-P / NFCE / NCS	T_{max} 320°C / 608°F

other sleeve materials on request

Subject to technical change without notice.

The data given are max. values according to ASME B16.34.

IMPORTANT NOTE

for demanding conditions, such as process temperatures exceeding 200°C / 392°F: Valve size, media phase, plug position & temperature (constant or fluctuating) may have an impact on the lifetime. Consult factory for proper selection of sleeve material, cover sealing type and special features.

For temperatures < -29°C / -20°F, (T_{limit} = -60°C / -76°F) operating temperature, low-temperature carbon steel or austenitic stainless steels are required.

PT Diagram High Pressure, PN 160
PTFE sleeved plug valves with trunnion mounted design

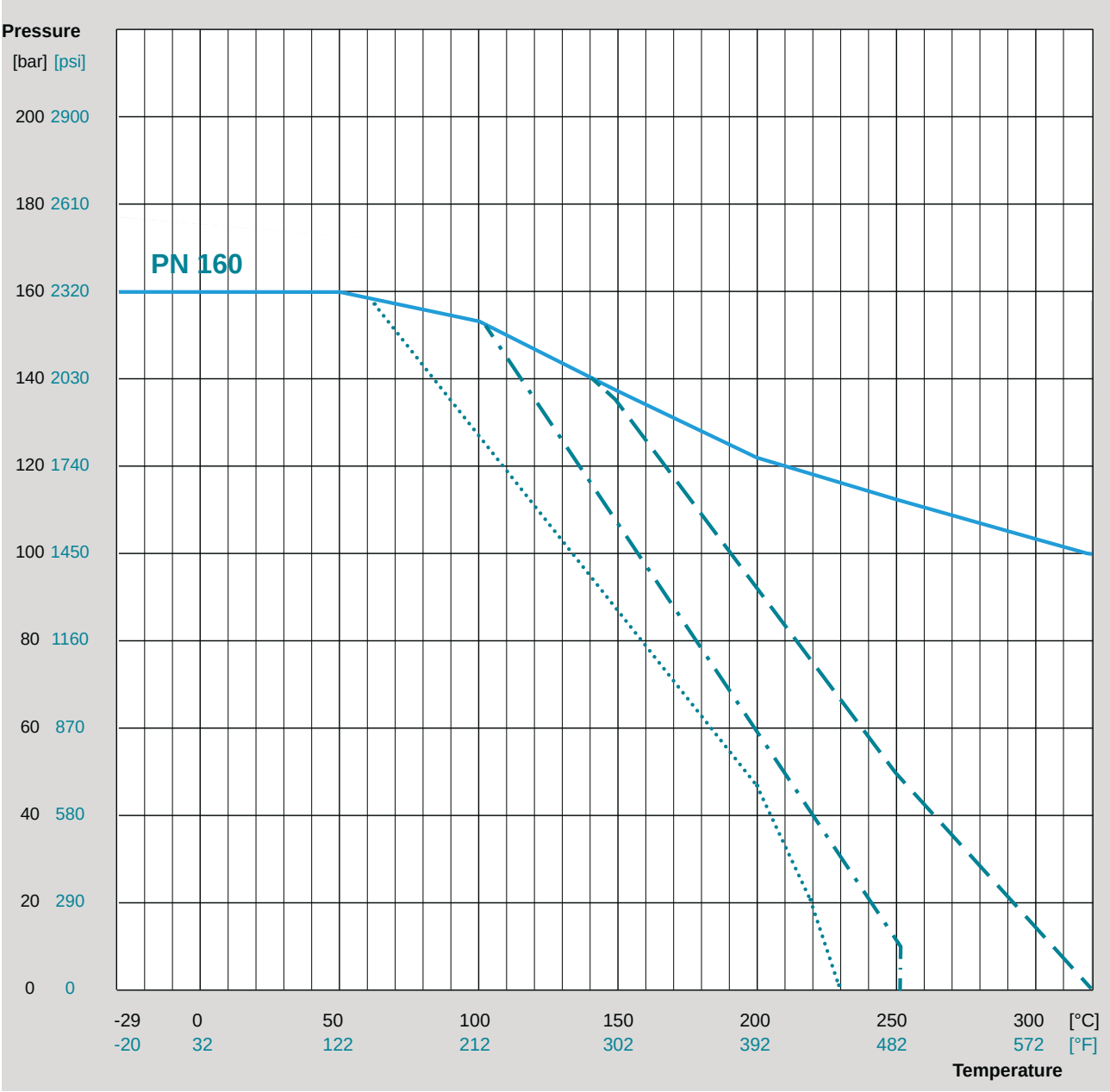

Body material (in line with EN 12516-1 and EN 1092-1)

EN 10213 - 1.4408 / Stainless Steel
other body materials on request

Sleeve material

.....	PTFE (virgin) / PTFE (glass)	T_{max} 230°C / 446°F
-.-.-	TFM / NXT / M111 / PTFE graphite	T_{max} 250°C / 482°F
— —	PTFE-P / NFCE / NCS	T_{max} 320°C / 608°F

other sleeve materials on request

Subject to technical change without notice.

The data given are max. values according to EN 12516-1 and EN 1092-1.

IMPORTANT NOTE

for demanding conditions, such as process temperatures exceeding 200°C / 392°F: Valve size, media phase, plug position & temperature (constant or fluctuating) may have an impact on the lifetime. Consult factory for proper selection of sleeve material, cover sealing type and special features.

For temperatures < -29°C / -20°F, (T_{limit} = -60°C / -76°F) operating temperature, low-temperature carbon steel or austenitic stainless steels are required.

PT Diagram High Pressure, Class 900
PTFE sleeved plug valves with trunnion mounted design

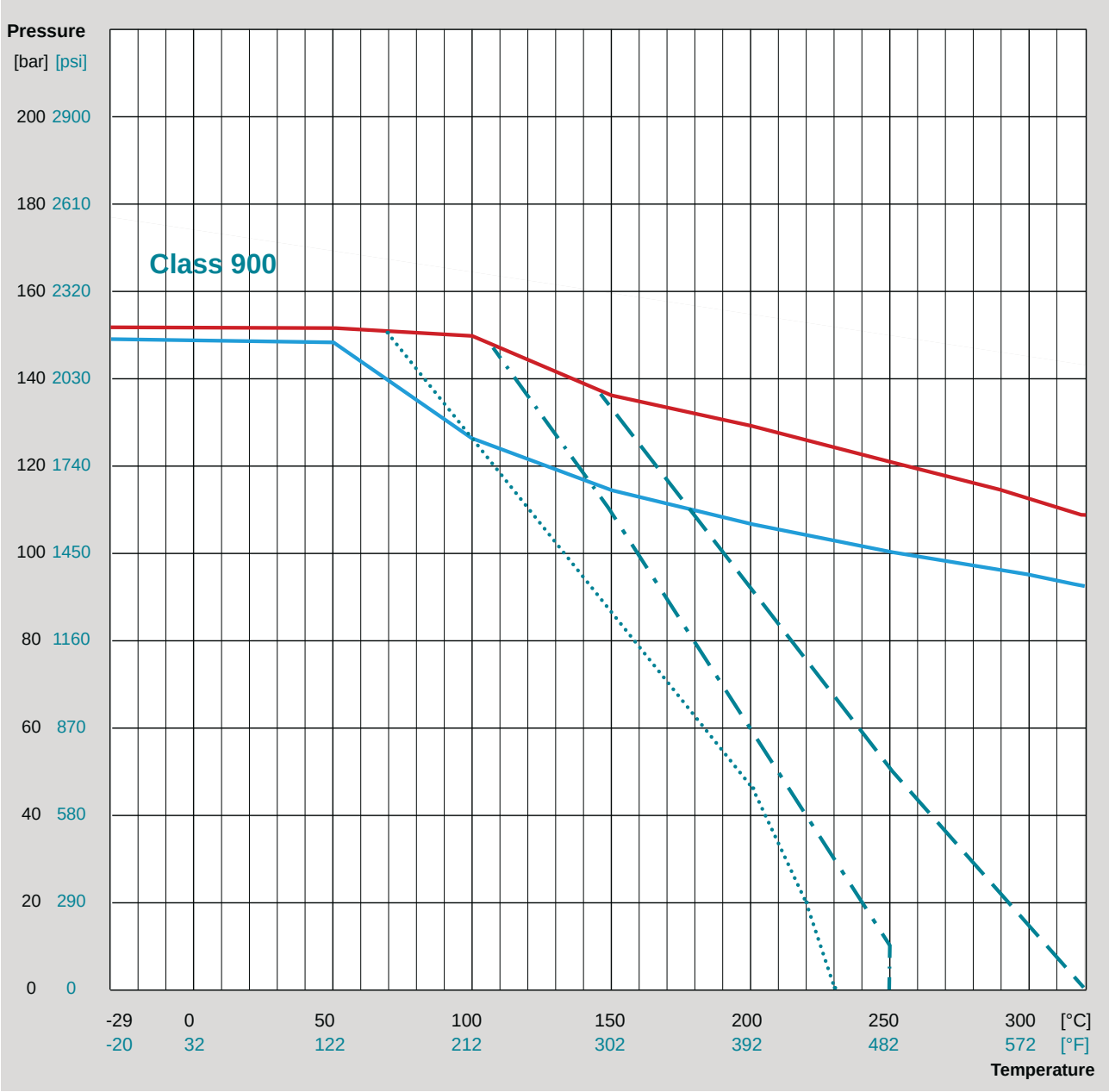

Body material (in line with ASME B16.34)

- ASTM A351 - CF8M / Stainless Steel
- ASTM A995 - CD3MN / Superduplex

other body materials on request

Sleeve material

PTFE (virgin) / PTFE (glass)	T_{max} 230°C / 446°F
TFM / NXT / M111 / PTFE graphite	T_{max} 250°C / 482°F
PTFE-P / NFCE / NCS	T_{max} 320°C / 608°F

other sleeve materials on request

Subject to technical change without notice.

The data given are max. values according to ASME B16.34.

IMPORTANT NOTE

for demanding conditions, such as process temperatures exceeding 200°C / 392°F: Valve size, media phase, plug position & temperature (constant or fluctuating) may have an impact on the lifetime. Consult factory for proper selection of sleeve material, cover sealing type and special features.

For temperatures < -29°C / -20°F, (T_{limit} = -60°C / -76°F) operating temperature, low-temperature carbon steel or austenitic stainless steels are required.

Plug types: two-way and multi-port for standard reduced and full bore design



Design	STANDARD	EXTRA (full bore)	multiway
Plug type	two-way	two-way	e.g. T4



- position indicator for all multi-way valves welded on lever or stem extension
- Lined plug valves: multi-way plugs only with PFA plug lining or made of special materials. Two-way plugs with PTFE lining up to DN 100 / NPS 4 available

Recommendation for three-way valves type F-3-S with vertical outlet (longer life-time compared to type F-3-W with horizontal outlet)

Options

Plugs made of special materials or special designs, e.g. with flushing devices, vent holes in plug bottom or plug upstream / downstream side

2-way	Plug type	Pos. I = 0°	Pos. II = 90°	Pos. III = 180°	Pos. IV = 270°
 Type F-2-ISO-STANDARD	D 	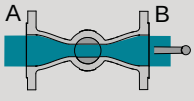	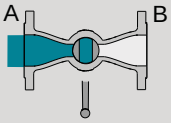		
 Type F-2-ISO-STANDARD-A	T4 * 	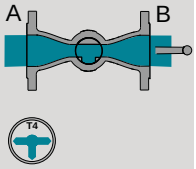	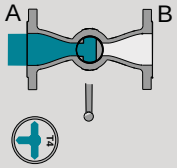		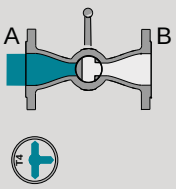

*) For highly expanding media AZ recommends the "i-plug" (relief hole and open plug buttom)

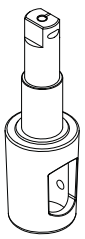

"i-plug"

Plug types: 3-way valve
for STANDARD and EXTRA design

Plug type	Pos. I = 0°	Pos. II = 90°	Pos. III = 180°	Pos. IV = 270°	3-way (vertical)
L	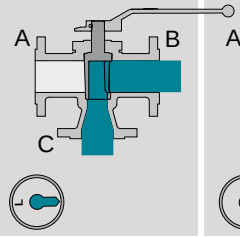	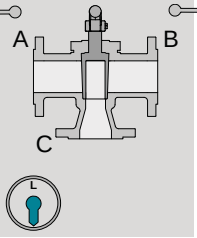	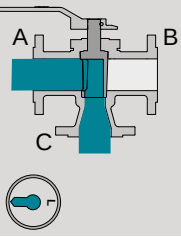		 Type F-3-S-ISO-STANDARD
LL	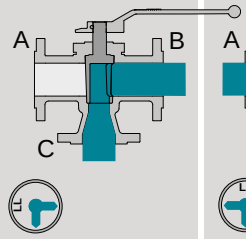	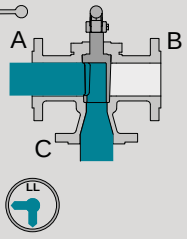			
IL*	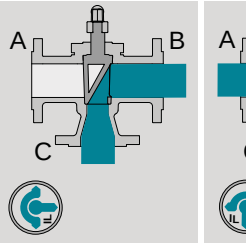	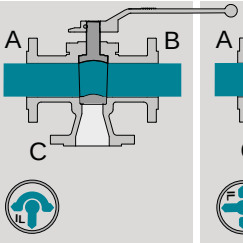	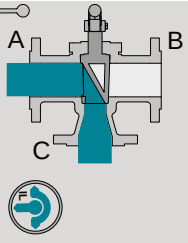		 Type F-3-S-ISO-STANDARD-A
TT	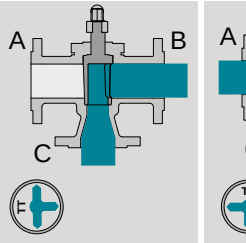	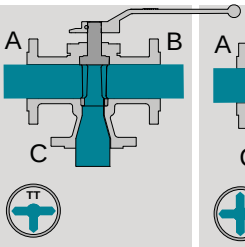	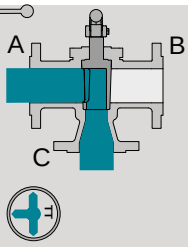		

Plug type	Pos. I = 0°	Pos. II = 90°	Pos. III = 180°	Pos. IV = 270°	3-way (horizontal)
T4	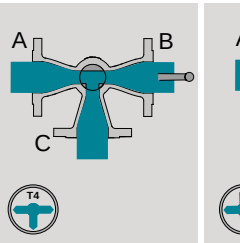	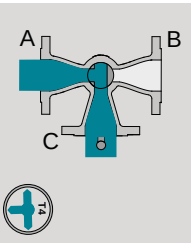	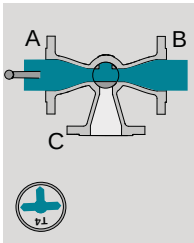	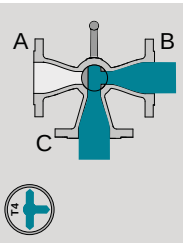	 Type **F-3-W-ISO-STANDARD**
L4	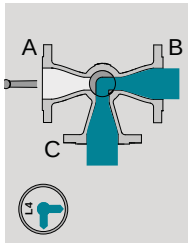	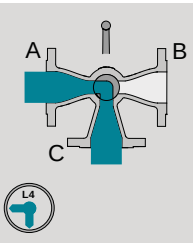	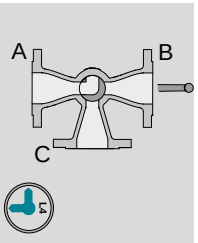		 Type **F-3-W-ISO-STANDARD-A**

*) for EXTRA valves with IL-plug, F-3-W-EXTRA with T4-plug is recommended (higher flowrate)
Lined valves: the IL-plug is only available in special materials

Plug types 3-way (120°) valves and 4-way valves for STANDARD and EXTRA design

3-way (120°) type 3-W-120:

- min. cross section guaranteed (switching phase)
- piggable execution on request
- minimum flow guaranteed

transflow design



3-way (120°) type 3-WP-120

- with positive overlap
- flow interruption / isolation

positive overlap

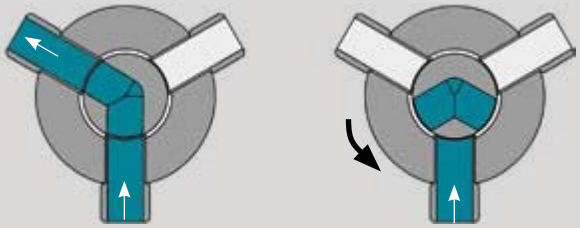

3-way (120°)	Plug type	Pos. I = 0°	Pos. II = 120°	Pos. III = 240°	
	L120 	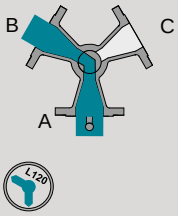	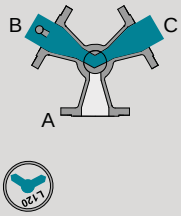	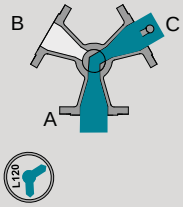	

4-way	Plug type	Pos. I = 0°	Pos. II = 90°	Pos. III = 180°	Pos. IV = 270°
 Type F-4-ISO-STANDARD 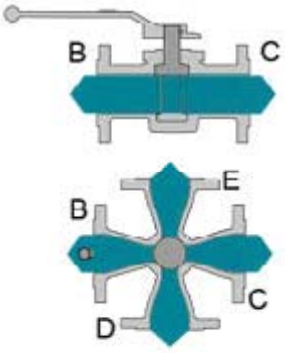	L4 	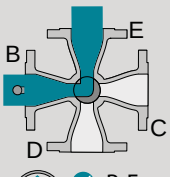 B-E C-D	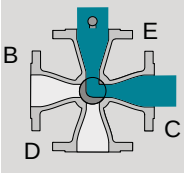 B-D C-E	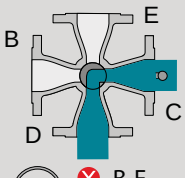 B-E C-D	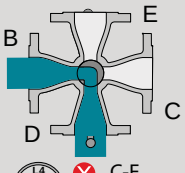 C-E B-D
	T4 	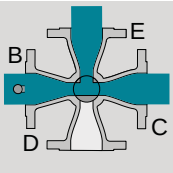 D B-C-E	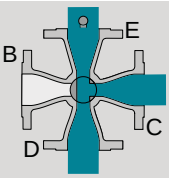 B C-D-E	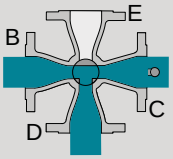 E B-C-D	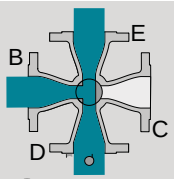 C B-D-E
	LL4 	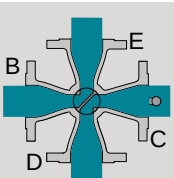 B-E + C-D	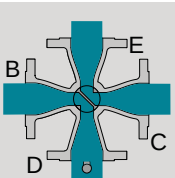 B-D + C-E		

open
closed

Plug types 4-way (special) and 5-way valves for STANDARD and EXTRA design

Plug type	Pos. I = 0°	Pos. II = 90°	Pos. III = 180°	Pos. IV = 270°	4-way (special) / 5-way
L	✗ C-D-E ✓ A-B	✗ B-C-D ✓ A-E	✗ B-D-E ✓ A-C	✗ B-C-E ✓ A-D	
LL	✗ C-D ✓ A-B-E	✗ B-D ✓ A-C-E	✗ B-E ✓ A-C-D	✗ C-E ✓ A-B-D	
IL	✗ D ✓ A-E + B-C	✗ B ✓ A-C + D-E	✗ E ✓ A-D + B-C	✗ C ✓ A-B + D-E	
T	✗ D-E ✓ A-B-C	✗ B-C ✓ A-D-E	✗ D-E ✓ A-B-C	✗ B-C ✓ A-D-E	
TT	✗ E ✓ A-B-C-D	✗ C ✓ A-B-D-E	✗ D ✓ A-B-C-E	✗ B ✓ A-C-D-E	



Type F-4-Special-ISO-STANDARD

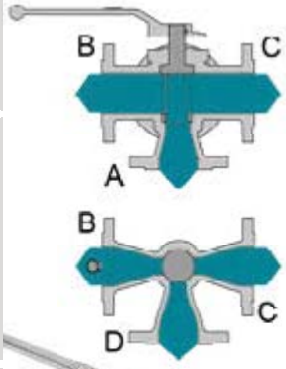



Type F-5-ISO-STANDARD

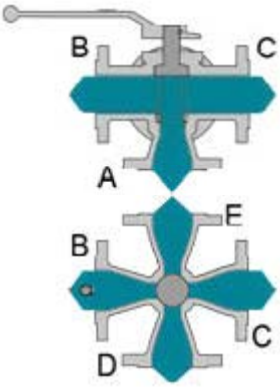

✓ open
✗ closed

ARMATUREN
free of cavities & maintenance

Your partner for highest demands!



Complete Catalogue
Edition 2026

AZ plants

Headquarters Germany
AZ Armaturen GmbH
Waldstrasse 7
D-78087 Moenchweiler
Phone: +49 / 7721 / 7504-0
sales@az-armaturen.com
www.az-armaturen.com

Plant Brazil
AZ Armaturen do Brasil LTDA.
Av. Osvaldo Berto, 600
CEP 13255-405 Itatiba - SP
Phone: +55 / 11 / 452499-50 / -51
az@az-armaturen.com.br
www.az-armaturen.com.br

Plant China
AZ Armaturen (Taicang) Co., Ltd.
No. 1 Zhengzhou Road
215400 Taicang City
Phone: +86 / 512 / 53667600
info@az-armaturen.cn
www.az-armaturen.cn

Plant South Africa
AZ Armaturen South Africa PTY LTD.
28 Derick Coetzee Street
Boksburg 1459
Phone: +27 / 11 / 397 3665
sales@az-armaturen.co.za
www.az-armaturen.co.za

Plant USA
AZ VALVES North America L.P.
18702 Intercontinental Crossing Drive
Houston, TX 77073
Phone: +1 / 832 / 827 2163
sales@azvalves.com
www.azvalves.com

Plant Saudi Arabia
AZ Valves Arabia Manufacturing Co.
Building No. 4066
Street 26, Cross 09
Dammam, Kingdom of Saudi Arabia
Phone: +966 / 13 835 1880
info@azvalves.com.sa

AZ services

Europe
- Germany (Moenchweiler & Rhineland)
- France (Lyon/ Bourg-lès-Valence)
- Great Britain (York/Roecliffe)
- Italy (Milan/Caltignaga)
- Poland (Warsaw/Opoczno)
- The Netherlands (Amsterdam)
- Russia (St. Petersburg)

America
- USA (Houston/TX)
- Brazil (São Paulo, Itatiba & Belem)
- Chile (Santiago de Chile)
- Mexico (Mexico-City)
- Peru (Lima)

Middle East
- Saudi Arabia (Damam)

Asia
- China (Taicang)
- South Korea
- Thailand (Rayong)
- Vietnam (Hanoi)

Africa
- South Africa (Johannesburg)

Detailed addresses
on our website

www.az-armaturen.com

Rev 1 - 05/2026 - 0 - GB - Subject to technical change without notice

www.az-armaturen.com